AMERICAN RANGE
QUALITY COOKING EQUIPMENT

USE & CARE AND INSTALLATION MANUAL FOR

CUISINE & PERFORMER GAS RANGES

Model Number: _____ *	Installation Date: _____
Serial Number: _____ *	Installation Company: _____
Gas Type: _____ *	Installation Rep's Name: _____
Electrical Information: _____ *	Installer's Address: _____
Purchase Date: _____	Installer's Phone: _____
Dealer: _____	** As specified on Range Nameplate - see page 8 for reference*

CUISINE
ARR-530

PERFORMER
ARROB-430

Shown with optional 4" stub back and leg caps.

DESIGN ◆ CLASS ◆ FUNCTION

ABOUT THIS MANUAL

BEFORE USING YOUR APPLIANCE, PLEASE READ THIS MANUAL, PAYING SPECIAL ATTENTION TO THE IMPORTANT SAFETY INSTRUCTIONS LOCATED IN THE NEXT SEVERAL PAGES

This manual is divided into several sections:

- **Important Safety Instructions** informs you about significant safety precautions when installing and operating your new appliance. THIS IS A MUST READ SECTION OF THE MANUAL.
- **Installation Section** describes how to unpack the unit, what to save and what to discard, installation dimensions, gas and electrical connections and how to identify the primary parts of the product so you can better understand what's going on "under the hood".
- **How to Operate Your Range *(where applicable)* Sections** show you how to light the burners, set the range for broil or bake and how to use convection to speed cooking times and improve the quality of your baked and roasted dishes.
- **Care & Cleaning** discusses how to keep your product in good operating condition, how to identify what might be going wrong with the unit, and how to communicate your observations with authorized field service technicians.
- **Troubleshooting & Parts** describes how to troubleshoot common issues and available parts for your range
- Warranty

RETAIN THIS MANUAL FOR FUTURE REFERENCE

DESIGNED & BUILT IN USA
PROFESSIONAL COOKING EQUIPMENT

ETL Intertek

IMPORTANT SAFETY INSTRUCTIONS

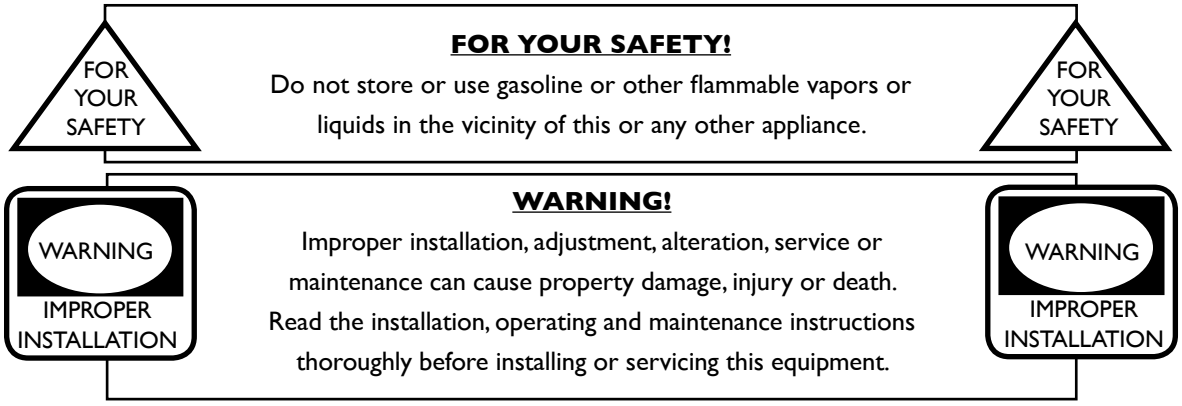

IMPORTANT - PLEASE READ AND FOLLOW!

Instruction to be followed in the event the user smells gas must be posted in a prominent location.
This information must be obtained by consulting the local gas supplier.

- Before beginning, please read all the instructions carefully.
- DO NOT remove permanently affixed labels, warnings, or plates from product. This may void the warranty.
- All local and national codes and ordinances must be observed, installation must conform with local codes.
- The Installer must leave these instructions with the consumer who must retain for local inspector's use and for future reference.
- Installation and service must be performed by a qualified installer, service agency or gas supplier.
- Please ensure that the product is properly grounded.
- In the Commonwealth of Massachusetts, installation must be performed by a licensed plumber or gas fitter.

Your safety and the safety of others is very important. We have provided many important safety messages in this manual and on your appliance. Always read and obey all safety messages.

⚠ This is the SAFETY ALERT SYMBOL. This symbol alerts you to hazards which will result in severe injury or death.

⚠ DANGER Hazards or unsafe practices which will result in severe personal injury or death.

⚠ WARNING Hazards or unsafe practices which may result in severe personal injury or death.

⚠ CAUTION Hazards or unsafe practices which may result in minor personal injury or property damage.

⚠ WARNING **CA PROPOSITION 65:** The burning of gas cooking fuel generates some chemical by-products which are on the list of substances known by the State of California to cause cancer, birth defects and/or reproductive harm. To minimize exposure to these substances, always operate this unit according to the Owners Manual, ensuring to provide proper ventilation.

⚠ WARNING This is a vented appliance. The appliance is not to be installed in conjunction with an air curtain, range hood, or ventilation systems which operates by blowing air downward towards the appliance. This type of ventilation system may cause ignition and combustion problems with the gas cooking appliance resulting in personal injury or unitented operation.

IMPORTANT SAFETY INSTRUCTIONS

A ground fault interrupter *(GFI)* shall be used as required by NFPA-70 *(National Electric Code)*, Federal / State / Local laws or local ordinances.

- The required use of a GFI is normally related to the location of the receptacle to its proximity to significant sources of water or moisture.
- American Range will not warranty any problems resulting from GFI outlets which are not installed properly or do not meet the requirements below.

IF THE USE OF A GFI IS REQUIRED, it must be:

- The receptacle type *(breaker type or portable type not recommended).*
- Used with permanent wiring only *(temporary or portable wiring not recommended)*.
- On a dedicated circuit *(no other receptacles, switches or loads in the circuit).*
- Connected to a standard breaker or appropriate size *(GFI breaker of the same size not recommended).*
- Rated for class *(5mA ± 1mA trip current)* as per UL 943 standard.
- In good condition and free from any loose-fitting gaskets *(if applicable in outdoor situations).*
- Protected from moisture *(water, steam, high humidity)* as much as reasonably possible.

⚠ WARNING To prevent possible damage to cabinets and cabinet finishes, use only materials that will not discolor or delaminate and will withstand temperatures up to 194°F *(90°C)*. Heat resistant adhesive must be used if the product is to be installed in laminated cabinetry, check with your builder or cabinet supplier to make sure that the materials meet these requirements.

⚠ WARNING The use of cabinets for storage above the oven may result in potential fire or burn hazard.

⚠ DANGER To avoid risk of electrical shock, personal injury or death; verify your appliance has been properly grounded in accordance with local codes, or in absence of codes, with the National Electrical Code *(NEC)*, ANSI/NFPA 70 latest edition, or in Canada, to Canadian electrical codes, CSA, C22.2.

⚠ WARNING Do not use the handle or oven door to lift the oven, remove pull down door before installation to ensure that it is not used to lift the unit. Make sure pins are inserted into hinges before removing door to prevent injury to hands and / or fingers. *(See installation instructions)*

⚠ WARNING The misuse of the oven door*(s) (e.g.; stepping, sitting, or leaning on them)* can result in hazard or injuries and damage to the product.

⚠ WARNING This appliance must not be used for space heating. This information is based on safety considerations.

⚠ WARNING MOVING HAZARD
To avoid risk of severe personal injury; this appliance requires 2 or more personnel while handling and moving. Use of moving device is recommended.

IMPORTANT SAFETY INSTRUCTIONS

⚠ WARNING

IF THE INFORMATION IN THIS MANUAL IS NOT FOLLOW EXACTLY, A FIRE OR EXPLOSION MAY RESULT CAUSING DAMAGE, PERSONAL INJURY OR DEATH

INSTALLATION AND SERVICE MUST BE PERFORMED BY A CERTIFIED / LICENSED INSTALLER, SERVICE AGENCY OR THE GAS SUPPLIER

- Do not store or use gasoline or other flammable vapors or liquids in the vicinity of this or any other appliance.
- Please observe all local and national codes and ordinances.
- Do not remove any permanent warning labels or plates from this product.
- Please ensure that this product is electrically grounded.
- Consumers must retain these instructions for local inspectors and for future use.

WHAT TO DO IF YOU SMELL GAS

- **Do not try to light any appliance**
- **Do not touch any electrical switch**
- **Do not use any phone in your building**
- **Using a neighbor's phone, immediately call your gas company**
- **Follow the gas supplier instructions**
- **If you can not reach your gas supplier, call the Fire Department**

PRECAUTIONS

SHIPPING DAMAGE CLAIM PROCEDURE

The equipment is crafted and inspected carefully by skilled personnel before leaving the factory. The transportation company assumes full responsibility for the safe delivery upon acceptance of the equipment.

If you receive a damaged product, immediately contact your delivery company, your dealer, your builder or installer. Do not install or attempt to operate a damaged appliance.

1. Note on the freight bill or express delivery any visible loss or damage and have the note signed by the person making the delivery.
2. File claim for damages immediately regardless of the extent of damages.
3. For damage noticed after unpacking *(concealed loss or damage)*, notify the transportation company immediately and file a "Concealed Damage" claim with them. This must be done within fifteen *(15)* days from the date that delivery is made to you. Retain the shipping container for inspection.

⚠ CAUTION

Check your local building codes for proper installation methods. In the absence of local codes, this appliance must be installed in accordance with the National Fuel Gas Code No. Z223.1 current issue, and the National Electrical Code ANSI/NFPA No. 70 current issue, or the CAN – B149 Installation Codes for Gas Burning Appliances, and C22.1 Canadian Electrical Code Part 1.

Verify the type of gas supplied to the location, being sure that the appliance is connected to the type of gas for which it is certified. Models come from the factory certified for use with Natural Gas *(NG)* or Liquid Propane *(LP)* gas. Your product, shown on the rating label and the supplied gas type must be the same. Upon opening your product, the rating label can be located on the front panel. If it is a cooktop, the rating lable can be found on the side panel underneath the left burner.

If connecting this appliance to propane gas, make certain the propane gas tank is equipped with its own high-pressure regulator - in addition to the pressure regulator supplied with this product when applicable. The maximum propane gas pressure to this appliance must not exceed 14.0 inches of water column *(34.9 millibar)* from the propane gas tank to the pressure regulator. Your appliance must be installed by a qualified gas installation technician. Have the technician show you the exact location of the gas shut-off valve on the incoming gas line so you know how to turn off the gas if necessary.

IMPORTANT SAFETY INSTRUCTIONS

⚠ DANGER

Do not store items of interest to children above or near the appliance. Children, as well as adults, must never be allowed to sit, stand or climb on any part of the appliance. Serious personal injury may occur.

⚠ WARNING

Always **DISCONNECT** the electrical plug from the wall outlet power source before servicing the unit. It is recommended that a dedicated electrical circuit be used for this appliance. Always turn gas shut-off valve to **OFF** position before servicing unit.

⚠ CAUTION

For personal safety, this appliance must be connected to a properly grounded and polarized electrical power supply. If only a two-prong outlet is available, it is the customer's responsibility to have it replaced with a dedicated, grounded, three-prong electrical outlet by a licensed technician. The gas surface burner re-ignition system when applicable depends on a low resistance electrical ground connection for reliable operation.

- » Do not cut or remove the third *(ground)* prong from the power cord
- » Do not use an adapter plug
- » Do not use an extension cord
- » Do not use a power cord that is frayed or damaged

⚠ DANGER

To avoid the possibility of explosion or fire, do not store or use combustible, flammable or explosive liquids *(such as gasoline)* or vapors inside or in the vicinity of this or any other appliance. Keep items that could explode, such as aerosol cans, away from the product. Do not store explosive or flammable materials in nearby cabinets or areas. When operating the oven or broiler, do not touch the surfaces of the ceramic tile broiler, the rack or rack supports, the walls of the oven or the inside surfaces of the oven door - interior surfaces become hot enough to cause burns. The heat deflector, which deflects heat away from the control panel, and the oven door sides will also be hot during use.

⚠ WARNING

POWER FAILURE WARNING

Due to safety considerations and the possibility of personal injury, when applicable do not attempt to light or operate range burners, grills, griddles, the oven or broiler during a power failure. Safety systems which detect the presence of an ignition source and operate the gas safety valve do not function during a power failure. Be sure all gas valve knobs are turned to and remain in the OFF position during a power failure.

⚠ WARNING

The California Safe Drinking Water and Toxic Enforcement Act of 1986 ***(Proposition 65)*** requires the Governor of California to publish a list of substances known to the State of California to cause cancer or reproductive harm, and requires businesses to warn customers of potential exposures to such substances. Users of this appliance are hereby warned that when the oven is operated, there may be some low-level exposure to some of the listed substances including carbon monoxide. Exposure to these substances can be minimized by properly venting the oven to the outdoors using approved overhead ventilation equipment or by opening the windows and/or doors in the room where the appliance is located. This appliance must not be operated without a properly sized and functional ventilation hood.

⚠ WARNING

To reduce the risk of appliance tipping, it must be secured to the wall with a properly installed anti-tip bracket. To make sure the bracket has been installed properly, inspect behind the range using a flashlight.

- » Anti-tip devices are supplied where applicable and are necessary for range products.
- » This range can tip causing personal injury
- » See Installation Instructions supplied with the range and install the anti-tip device packaged with the range

IMPORTANT SAFETY INSTRUCTIONS

⚠ CAUTION

Purchase a kitchen fire extinguisher for your home and store it in close proximity to your appliance. Should an uncontrolled fire occur, never use water on grease fires. Never pick up a flaming pan. The oven door interior and exterior, especially the glass can get hot during operation. Do not touch the glass – use the door handle to open or close the range door.

The push-to-turn gas valve knobs on the appliance are designed to be child-safe, however, they are not a guarantee of operation. Children must not be left alone or unattended in the kitchen while the appliance is in use. Never leave the appliance unattended during use. Boil-overs may occur, causing spills which may ignite.

Never wear loose fitting or long sleeved apparel while cooking. Never wear garments made of flammable materials. Clothing may ignite or catch utensil handles. DO NOT drape towels or other items on door handles. These items could ignite and cause burns.

If your product is a range or oven ALWAYS place oven racks in the desired position before you start cooking and while the oven is cool. Always use dry and sturdy pot-holders to carefully slide the oven rack out to add or remove food.

If your product is a range or cooktop located near a window, be certain window curtains or other flammable objects do not blow over or near the range burners; the items could catch on fire.

If operating the surface burners, the flame must be adjusted to just cover the bottom of the pan or pot. Excessive high flame settings may cause scorching of the nearby counter-top surface, as well as the outside of the utensil and handles.

ALWAYS turn the appliance off at the end of cooking.

When dehydrating food items, periodically check during the process to ensure that they do not catch on fire.

If you are "flaming" liquor or other spirits under an exhaust, TURN THE FAN OFF. The draft from the fan could cause the flames to spread out of control.

Care must be exercised if your appliance is equipped with a high-shelf. During heavy or continuous use, this shelf may be come hot. Do not place combustible materials or plastic items on the shelf.

Turn the knobs to the OFF position prior to removing them from the valve stems for cleaning.

⚠ WARNING

NEVER use this appliance as a space heater to heat or warm the room. Doing so may result in carbon monoxide poisoning and overheating of the appliance. Do not use the range top or oven as a food or kitchen item storage area.

Never block or cover any slots, holes or passages located anywhere inside or outside the range. These structures are important to safe operation of the appliance and doing so may block airflow through the oven or cooktop possibly causing carbon monoxide poisoning or fire. Routinely keep all slots free of grease and other materials.

This appliance has been tested for safe performance using conventional cookware. DO NOT USE any device or accessory not specifically recommended in this guide. DO NOT USE pan or pan covers on surface units, grills or griddles. These devices can create serious safety hazards including personal injury, create performance problems and may damage the appliance. Do not store or use corrosive chemicals, vapors, flammables or non-food products in or near this appliance. It is specifically designed for use when heating or cooking food. The use of corrosive chemicals while heating or cleaning could result in personal injury or damage to the appliance.

INSTALLATION

DIMENSIONS, SPECIFICATION, GAS & ELECTRICAL REQUIREMENTS

CUISINE & PERFORMER RANGES		30" MODELS	36" MODELS	48" MODELS	60" MODELS
A) Overall Depth		30"	30"	30"	30"
B) Overall Width		29-7/8"	35-7/8"	47-7/8"	59-7/8"
C) Overall Height *(top of side panels)*		36-1/2"	36-1/2"	36-1/2"	36-1/2"
D) Overall Height *(top of grates)*		37-3/4"	37-3/4"	37-3/4"	37-3/4"
Leg Adjustment		1"	1"	1"	1"
Oven Interior Width		26"	32"	26" / 14-1/2"	26" / 26"
Oven Interior Height		15"	15"	15"	15"
Oven Interior Depth		20-1/2"	20-1/2"	20-1/2"	20-1/2"
Oven Volume		4.6 CU. FT.	5.7 CU. FT.	4.6 / 2.6 CU. FT.	4.6 / 4.6 CU. FT.
Electrical Requirements		120 VAC, 60 Hz Single Phase			
Max Amp Usage		10 AMP	10 AMP	10 AMP	10 AMP
GAS REQUIREMENTS	*Natural Gas*	7" W.C.	7" W.C.	7" W.C.	7" W.C.
	Liquid Propane *	11" W.C.	11" W.C.	11" W.C.	11" W.C.
GAS MANIFOLD PRESSURE	*Natural Gas*	5" W.C.	5" W.C.	5" W.C.	5" W.C.
	Liquid Propane *	10"W.C.	10"W.C.	10"W.C.	10"W.C.
RANGETOP BURNER RATING *Cuisine - Sealed Burner*	*Large*	17,000 BTU			
	Medium	13,000 BTU			
	Small	9,000 BTU			
RANGETOP BURNER RATING *Performer - Open Burner*	*Large*	25,000 BTU			
	Medium	18,000 BTU			
	Small	12,000 BTU			
Griddle Burner Rating		N/A	20,000 BTU	20,000 BTU	20,000 BTU
Grill Burner Rating		N/A	15,000 BTU	15,000 BTU	15,000 BTU
Approximate Shipping Weight *(Cuisine)*		330 LBS	390 LBS	660 LBS	780 LBS
Approximate Shipping Weight *(Performer)*		335 LBS	401 LBS	660 LBS	780 LBS

IMPORTANT: Use and complete the installation checklist provided in this manual to ensure proper installation and to validate the warranty

* Make certain that the propane gas tank is equipped with its own high-pressure regulator in addition to the pressure regulator supplied with this product

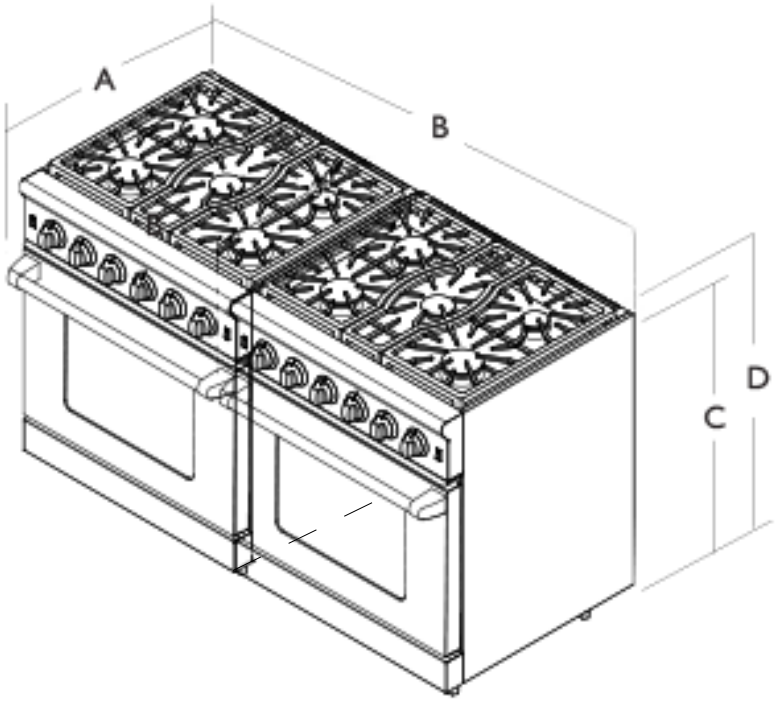

DIMENSIONS (see *chart above*)
A: Overall Depth
B: Overall Width
C: Overall Height (*top of side panels*)
D Overall Height (*top of grates*)

INSTALLATION

RANGE LOCATION:
The location for the range must meet the following criteria. If any of these criteria are not met, select another location.

CABINET PREPARATION:

1. The range is a free standing appliance. If the range is to be adjacent to cabinets, the clearances shown below, and on the next page, are required.
2. This range may not be recessed into the cabinets. The rear of the door must be beyond the edge of the front face of the adjacent cabinet.
3. The gas and electrical supplies should be located in adjacent right cabinet.
4. Any openings in the wall behind the range and in the floor under the range must be sealed.
5. Always keep the appliance clear and free from combustible materials, gasoline, or other flammable vapors and liquids.
6. Do not obstruct the flow of combustion and ventilation air to the unit.

⚠ WARNING **For optimal performance, the range must be installed away from drafts that may be caused by doors, windows, fans, heating and air conditioning outlets.**

⚠ WARNING **The maximum depth of the overhead cabinets installed on either side of the hood is 13".**

ELECTRICAL SERVICE:
A 120 VAC, 60Hz separately grounded circuit that is protected by a 15A circuit breaker or time delay fuse must be supplied to the appliance.

GAS SUPPLY:
Be certain the appliance being installed is correct for the gas service being provided. Refer to the appliance data plate for the gas supply requirements.

» Minimal natural gas supply pressure required is 7" water column.
» Minimal liquid propane *(LP)* gas supply pressure required is 11" water column.

A manual gas shut-off valve must be remotely installed and easily accessible in the adjacent cabinet. The regulator inlet is for 3/4" gas line. The appliance ships with a 1/2" to 3/4" adapter connected to the regulator.

VENTILATION
Proper ventilation is required for safe, efficient operation of this appliance. The range/cooktop must be installed under an appropriate canopy ventilation hood. The hood must be at least as wide as the appliance.

Especially in newer homes which are better sealed against the outdoors, a powerful exhaust fan can create a vacuum in the room. To avoid this condition, have a qualified contractor match the appropriate hood to the specific cooktop/range. A balanced ventilation system will factor the size of the range, size of the hood and power of the exhaust fan. It is recommended that the exhaust fan be powerful enough to move a minimum of 300cfm.

- Do not remove protective packaging until you are ready to perform the installation.
- Do not remove the protective wrapping from the product control panel until the product is installed.
- Use proper equipment to move products.
- Any openings in the wall and in the floor behind or under the appliance must be sealed.

⚠ WARNING Do not use an extension cord with this appliance. Such use may result in fire, electrical shock or other personal injury.

⚠ CAUTION The appliance is heavy. Use extreme care when handling.

⚠ WARNING Do not use the handle or oven door to lift the oven, remove pull down door before installation to ensure that it is not used to lift the unit. Make sure pins are inserted into hinges before removing door to prevent injury to hands and / or fingers. *(See installation instructions)*

INSTALLATION

INSTALLATION INSTRUCTIONS

- » Installation of this oven must be performed by qualified, certified and licensed persons.
- » Products are anchored to the wooden shipping pallet using metal straps that are screwed to the bottom of the product and the pallet.
- » To remove the packaging, first remove the staples located at the bottom perimeter of the corrugated cover.
- » Remove the corrugated cover by lifting it off the product and remove the inner packing.
- » Detach the product from the metal anchor strip by removing the attachment screw.
- » Confirm available access to adequate power and gas. *(See Specifications, Gas & Electrical Requirements table.)*
- » Fill out the front page and installation checklist of this installation manual with requested data. **Model number and serial number can be found on the nameplate located underneath the control panel on the front of the appliance.**

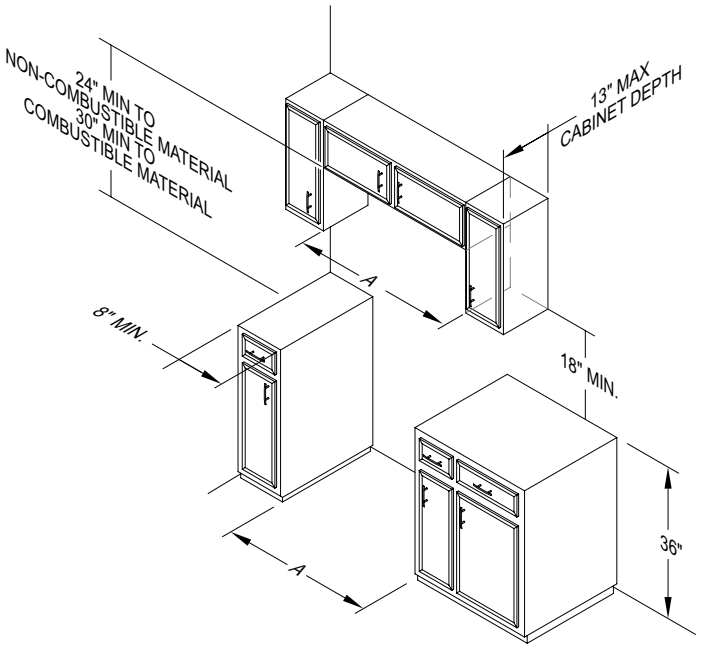

CLEARANCE DIMENSIONS

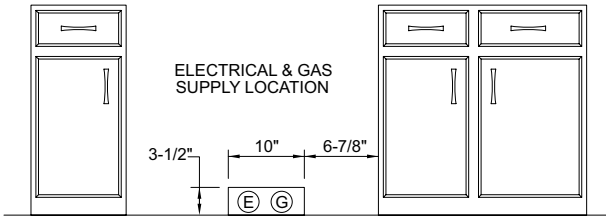

Range Width	"A" Dimension
29-7/8"	30"
35-7/8"	36"
47-7/8"	48"
59-7/8"	60"

CLEARANCE DIMENSIONS

Wall Install

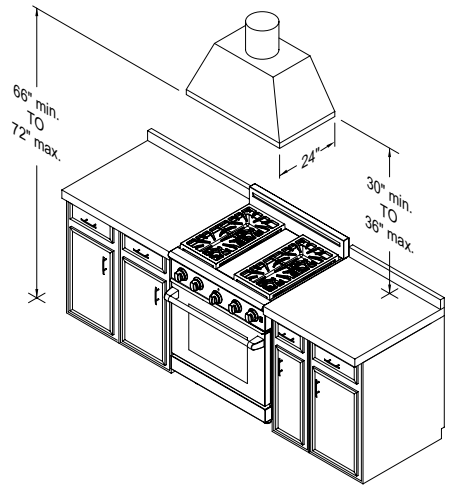

Island Install

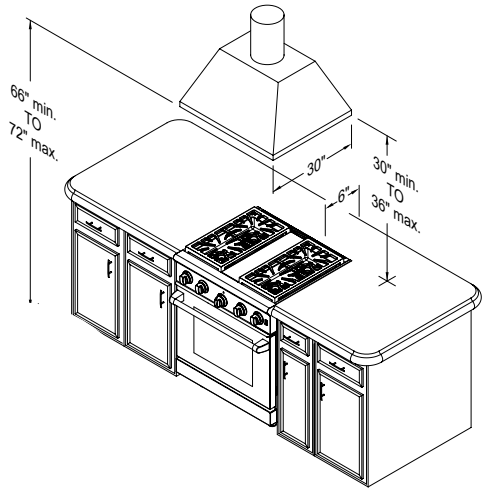

INSTALLATION

STEP ONE: REMOVE THE OVEN DOOR *(Repeat steps A - C for second door, if applicable)*

A. Open door to its fully opened position and remove oven racks. Using a screwdriver, rotate the catch over the retaining arm on each hinge
B. Gently close the door until catch stops the door
C. Hold the door with both hands just below the handle and pull it away from the oven while continuing to lift.

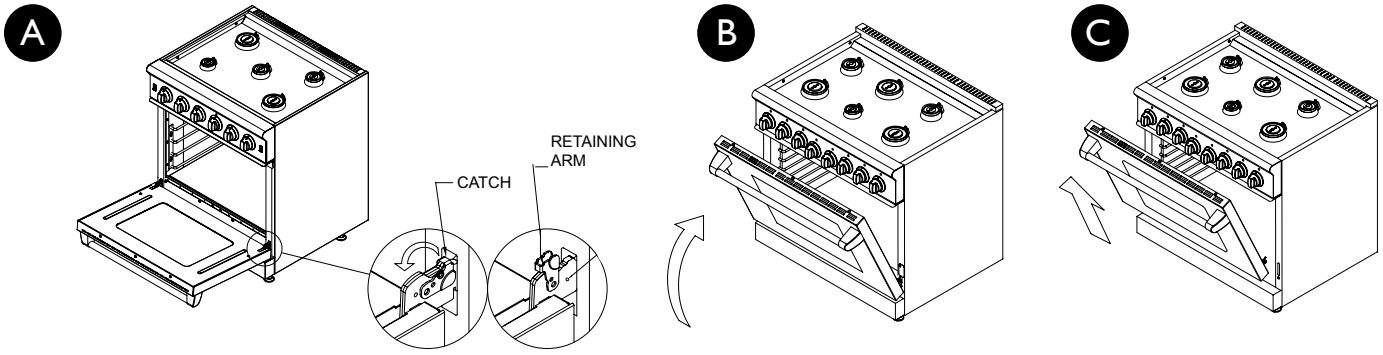

STEP TWO: LEVEL THE RANGE

D. Measure the four corners in each cutout area to verify that flooring is level
E. For uneven or sloped floors, level unit with metal shims only, as the adjustment required may exceed the thread available in the leg.
F. **IMPORTANT:** Remove/peel-off all protective plastic film from stainless steel and move unit into opening. If possible, use protection for the floor.
G. Check that unit is level side to side and front to back. Side trim of the high corner must be 3/8" above countertop.
H. Pull oven straight out. Install Anti-Tip Device according to installation instructions found inside the Anti-Tip Device kit.

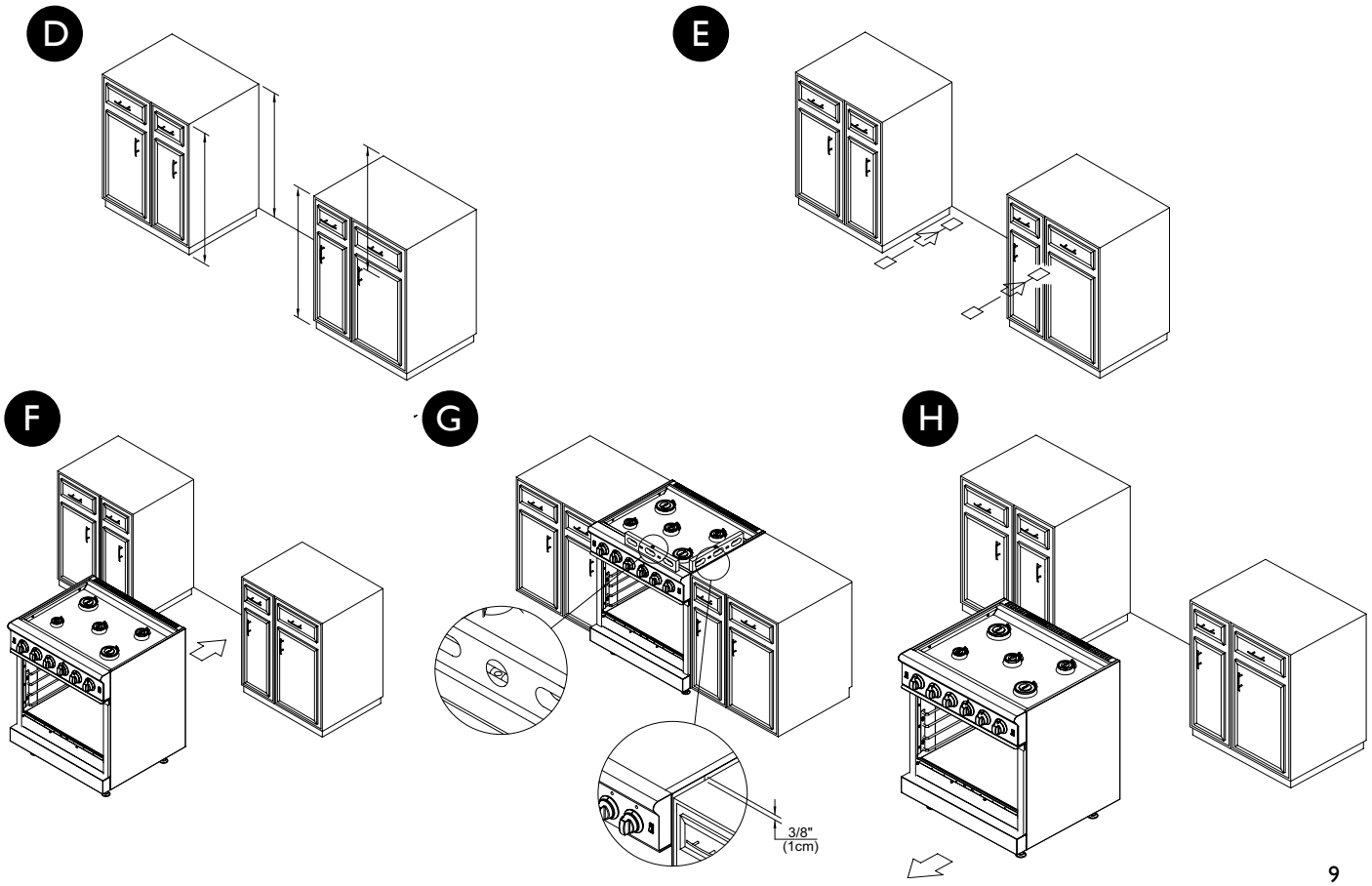

INSTALLATION

STEP THREE: CONNECT GAS & ELECTRICAL SUPPLY

I. Connect the gas supply.
NOTE: Before placing appliance into operation, always check for gas leaks. This must be performed by your dealer, a qualified licensed plumber, or gas service company

J. Connect the electrical supply.

I

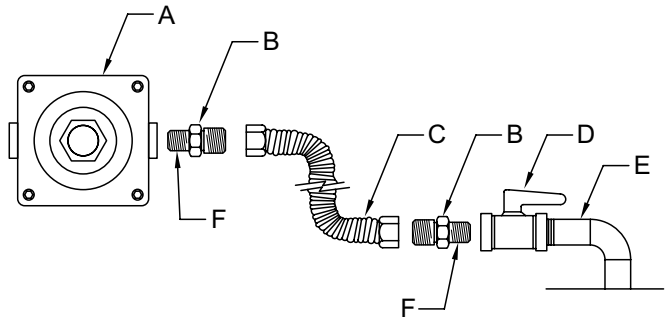

A. Gas pressure regulator.
B. Adapter (must have 1/2" male pipe thread).
C. Flexible connector.
D. Manual gas shut-off valve.
E. 3/4" or 1/2" gas supply.
F. Use pipe-joint compound.

⚠ DANGER

To avoid risk of electrical shock, personal injury or death; leak testing of the appliance must be conducted according to the manufacturer's instructions. Before placing appliance in operation, always check for gas leaks with soapy water solution.
DO NOT USE AN OPEN FLAME TO CHECK FOR GAS LEAKS

⚠ WARNING

The electrical service in the building must be equipped with a properly grounded three-prong receptacle, in accordance with local codes, or in the absence of local codes, with the National Electrical Code, ANSI/NFPA 70, or in Canada - to Canadian electrical codes, CSA C22.2.
DO NOT CUT OR REMOVE THE GROUNDING PRONG FROM THIS PLUG

J

IMPORTANT - This appliance is equipped with a three-prong grounding plug for your protection against possible electric shock hazard. Plug it only to a dedicated, grounded three-prong electrical outlet. It is the responsibility of the customer to make sure the proper type of outlet is installed. Do not, under any circumstances, ground to a gas pipe.

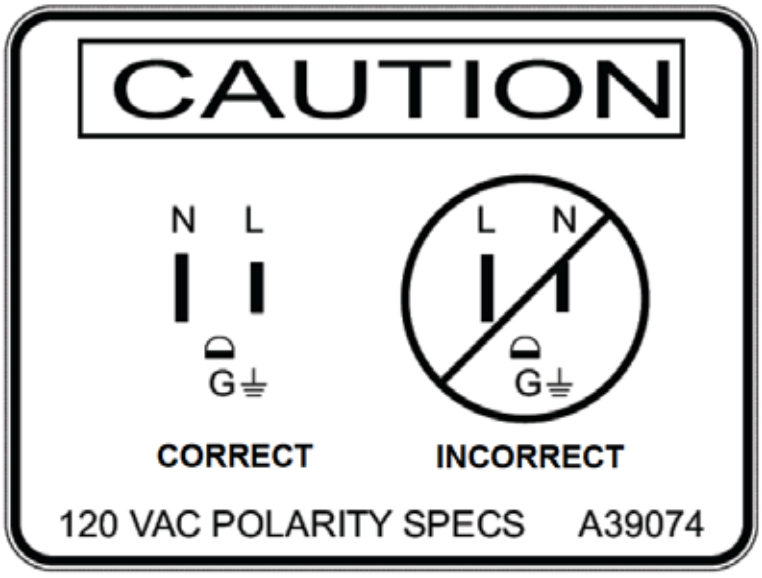

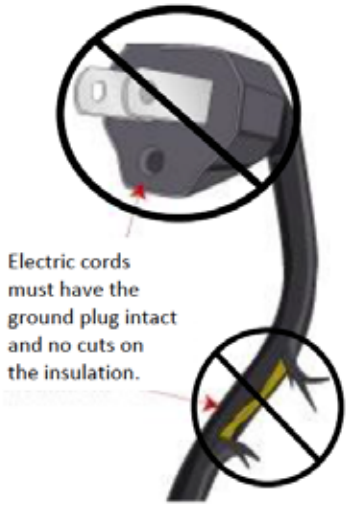

STEP FOUR: INSTALL THE DOOR

K. Install the door and open the door completely.

L. Rotate the catch over the retaining arm on each hinge.
(Install the oven racks and close the oven door)

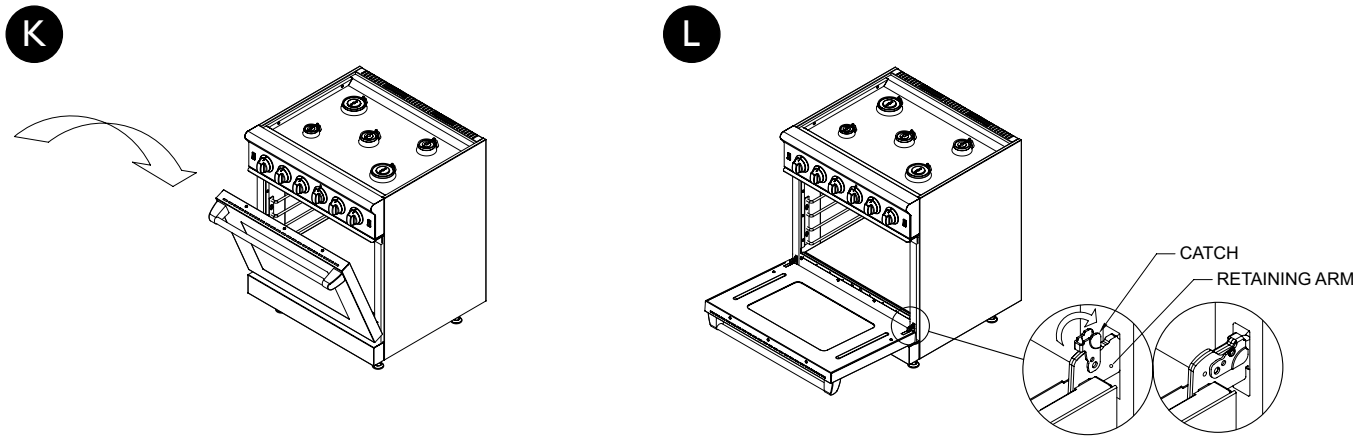

STEP FIVE: INSTALL THE BURNERS AND GRATES

CUISINE:

M. Install burner heads and burner caps on the pre-installed burner bases.

N. Remove grates from packaging and inspect them for rubber feet. Place the grate on top of grate support.

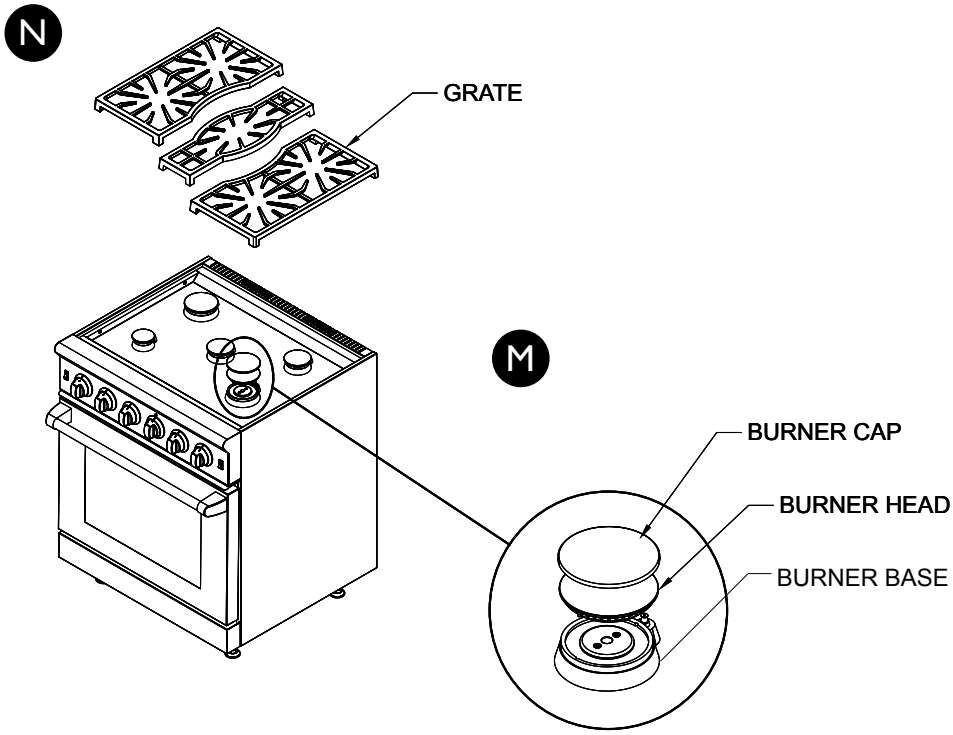

INSTALLATION

STEP FIVE: INSTALL THE BURNER AND GRATES *(continued)*

PERFORMER:

O. Remove the burner pans. Cut and discard the shipping ties on the burner base. Confirm that the burner base is flat on the burner support and the air shutter is positioned over the gas orifice. Install the burner pans.

P. Install the burner heads on the burner bases. Align the holes on top of the burner with pins on base of burner for proper capacity & operation. For locations of burner head see burner configurations. Each burner is different by BTU capacity. Mis aligning them could increase carbon monoxide gases to an unsafe level and could alter the design performance of the range.
NOTE: On LP gas units, the small burner uses a "MEDIUM" burner head, but is configured to run at "SMALL" BTU levels.
REMOVE GRATES FROM PACKAGING AND INSPECT THEM FOR RUBBER FEET. PLACE GRATES ON TOP OF RANGETOP

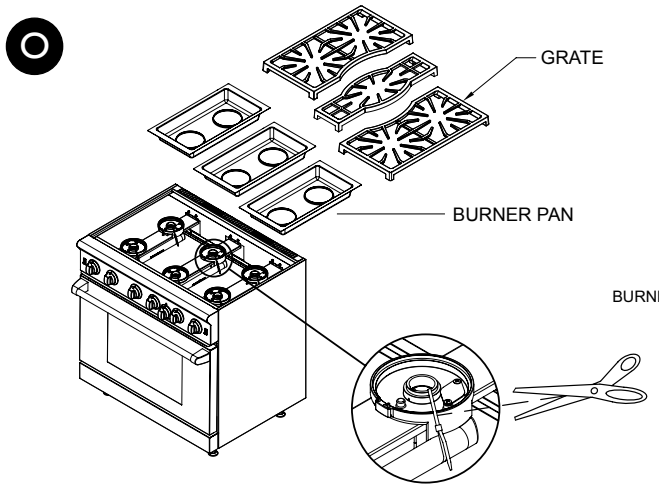

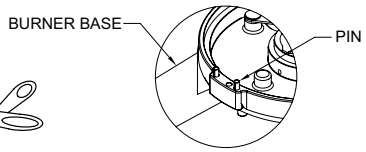

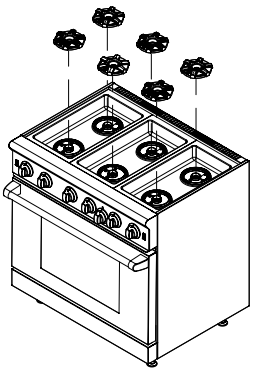

PERFORMER BURNER CONFIGURATIONS

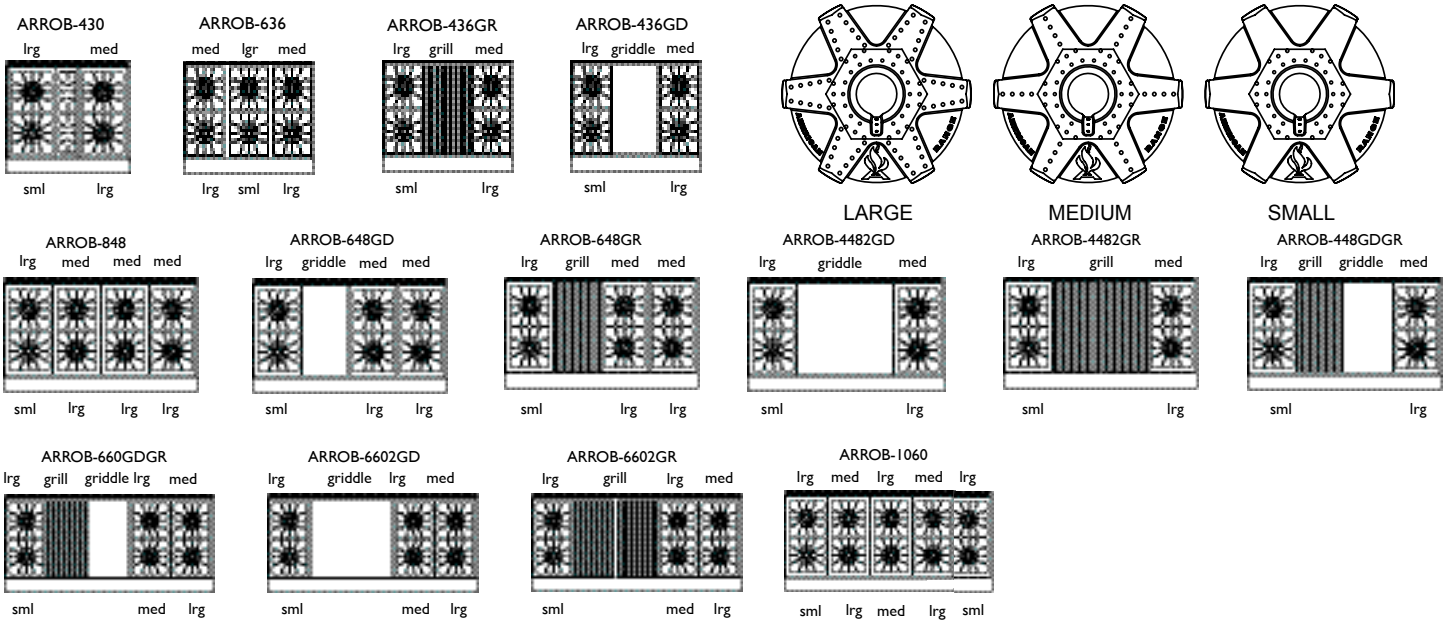

IMPORTANT: FINAL PREPARATION PRIOR TO USE

1. Verify all plastic protective film has been removed from stainless steel.
2. All Stainless Steel body parts should be wiped with hot soapy water and with liquid cleaner designed for this material. **DO NOT USE ABRASIVE CLOTHS, CLEANERS OR POWDERS!** Scratches are almost impossible to remove.
3. The interior of the oven should be washed thoroughly with hot, soapy water to remove film residues and installation debris before being used for food preparation, then rinsed and wiped dry. Solutions stronger than soapy water are rarely needed.

OPERATING YOUR RANGE

COOKWARE RECOMMENDATIONS

TO AVOID THE RISK OF SERIOUS INJURY, DAMAGE TO THE RANGE OR COOKWARE, PLEASE OBSERVE THE FOLLOWING GUIDELINES:

Bakeware, such as large casserole pans, cookie sheets, etc., must never be used on the cooktop.

Placement of large stock pots must be staggered when used on the cooktop.
Select the base diameter of the pot to match the diameter of the flame. The diameter of the flame and the diameter of the pan bottom must match, or be slightly smaller. Too large or too small pots on a burner will compromise cooking performance.

Do not place food packaged or wrapped in aluminum foil directly on the burner grate above the burner. Aluminum foil can melt during cooking.

Be careful to not let plastic, paper or cloth come in contact with a hot burner grate. These materials can catch fire or melt.

Never let a pan boil dry – and if it occurs remember it can be extremely hot – and very dangerous. If this does occur, turn off the burner immediately. Wait a while, until the pot cools down enough to handle; this could be several minutes, but could save you from burns or other serious injury.

The pan bottom should be flat, the heavier the better – and well balanced on the cooktop grate – sitting flat without rocking – preferably with tight fitting lids. Try not to slide the pot across the grates – while it is very handy to do so – you may end up scratching the pot or the grate.

Always be careful when using high flames, as in wok cooking, as they may contact flammable materials or make the handles of the wok very hot. Use the wok ring *(optional)* to stabilize the wok.

SUGGESTED BURNER SETTINGS	
HEAT SETTINGS	**USE**
Simmer	Melting small quantities of butter, simmer grains, rice, oatmeal
Low	Poaching eggs, fish, poultry
Low - Medium	Fry eggs, heat milk, cream sauces
Medium	Puddings, custards, gravies
Medium High	Sauté vegetables, braise meats, soups and stews, deep fat frying, boiling water and pasta, blanching vegetables, searing meats
High	Large quantity of water to boil, large quantity frying and cooking

OVENS 101

The oven is a gas fired, temperature controlled cooking cavity which is highly insulated to keep the kitchen cool and the food hot. The oven contains two burners - the Bake burner positioned below the oven floor and the Broil burner located in the ceiling of the oven. Bake and Broil are very different cooking operations and the burners are designed to deliver energy in a way appropriate to the task.

There are two types of baking - called Standard Bake *(or conventional)* and Convection Bake. Standard or conventional baking make best use of Grandma's cookie, cake or pie recipes – like Bake at 350°F for forty-five minutes – to get the job done. These recipes are tried and true – conventional or standard bake will deliver wonderful performance every time you cook.

When you Convection bake *(using a fan to circulate the high temperature air inside the oven)* you can lower the thermostat about 25° and reduce the cook time by about 25% - and achieve fine cooking results just like Grandma's – taking less time and using less energy. Use the same recommended temperatures for meats and poultry dishes – but keep watch of the time. Convection cooking technology was first developed in Europe and has been used for many years – recently taking hold in US residential kitchens and cookbooks.

In convection cooking, not only is the cook time faster, but also, the oven temperature is more even, top to bottom and side to side – so cookies on several racks will have the same brown color and texture. However, to best take advantage of convection, use low, shallow bakeware so that moving air can get over the sides and up to the food surface. Foods in covered dishes *(like casseroles or pot roasts)* do not benefit from convection cooking.

OPERATING YOUR RANGE

OVEN OPERATION

To light the oven, push in and turn the thermostat to the desired operating temperature from 150°F to 500°F. You may be able to see a bright glow from the sides of the oven bottom – this is normal and indicates the hot surface igniter is activated. Once the igniter is hot enough for ignition, the gas valve will open, allowing the flow of gas into the bake burner. This may take up to one minute.

During the first few minutes of operation, a mild condensation may appear on the interior glass pane of the door window. Water vapor is a normal by-product of combustion, and the condensation will disappear as the oven warms.

If you would like to bake using the Convection feature, you may turn on the fan at any time – allowing the oven about twenty or thirty minutes to preheat before use.

Never place any pan or food item on the bottom of the oven, always use an oven rack place in at least the lowest position.

To use the Broil feature of the range, first consider what type of broiling you would like to perform. The closer you are to the broil burner, the faster you will evaporate moisture from the surface of food and the quicker the surface will brown. In a similar fashion, the further away you place the food (on the lowest rack, for example) the slower you will evaporate surface moisture and the longer it will take for the surface to brown. A good rule of thumb is to start about 6" away from the broiler and watch for how quickly the food is browning.

BROILER OPERATION

To light the broiler, push in and turn the thermostat to the position labeled BROIL on the control knob. In about twenty seconds, you will see a bright glow in the oven - this is the hot surface igniter. Once the igniter is hot enough for ignition, the gas valve will open, allowing the flow of gas into the broil burner. This may take up to one minute.

The broiler will have a blue flame that covers the ceramic tiles – after a few minutes, the tiles will glow bright red/orange and radiate infrared energy. Remember the red surface is over 1800°F in temperature and can be a source of serious burns or injury.

The Bake burner and Broil burner will not operate at the same time; the convection fan will not operate during Broiling.

RANGETOP-BURNER OPERATION *(Sealed and Open Burners)*

Make sure there is nothing on the burners and/or grates prior to igniting the burners. Push the knob in, and turn it counter-clockwise to the HIGH position. Adjust the flame to the desired height. The burners are equiped with a flame-sensing ignition system that automatically detects the presence of flame on the burners, and relights in the event the flame goes out.

GRILL OPERATION *(GR Models Only)*

Make sure there is nothing on the grilling rack prior to igniting the grill. Push the knob in and turn it counter-clockwise to the HIGH position. The power ON indicator light will glow indicating the grill valve is on. The grill is equipped with a flame-sensing ignition system – that automatically detects the presence of flame on the grill burner – and relights it in the event it goes out. Adjust the flame to the desired height.

After cooking, allow the module to cool completely and remove the drip tray slowly, discarding grease and other food particles. The grill grate may be removed - exposing the radiants - which may be lifted out and placed in the dishwasher along with the drip tray for cleaning. The grate is porcelain coated and may be washed with hot soapy water and a soft brush.

BEST COOKING RESULTS WHEN USING YOUR GRILL

The intense radiant heat from the grill vaporizes the surface of your food, locking in flavor.

- » Add any barbecue sauces during the last few minutes of cooking, long enough to caramelize the sauce.
- » For best results, turn food with tongs or a flat spatula to avoid piercing meat or poultry.
- » Turn meat once when juices rise to the surface. Turning meat more than once results in the loss of meat juices.
- » Never squeeze juices out of meat.
- » Before cooking steaks or chops, trim most of the outside fat to prevent excessive flare-ups. Slash into the edges of steaks or chops to keep meat flat on the grill.
- » Fish should be cooked at the lowest setting eight to ten minutes for every inch of thickness, measured at the thickest part of the fish.

OPERATING YOUR RANGE

GRILL CHART			
FOOD ITEM	**INTERNAL TEMPERATURE**	**HEAT SETTING**	**TIME**
Hamburgers 1/2" to 3/4"	160°	Medium	8 to 10 minutes
Steaks 1" to 1-1/2"	Rare 140°	Medium - High	10 to 20 minutes
Steaks 1" to 1-1/2"	Medium 160°	Medium - High	12 to 25 minutes
Pork chops 3/4" to 1"	145° & 3 minutes rest time	Medium	15 to 25 minutes
Lamb chops	160°	High	12 to 15 minutes
Poultry pieces	170°	Low - Medium	25 to 35 minutes
Fish 1" thick	145° Minimum	Medium	8 to 10 minutes

Allow grill to cool completely before cleaning. Remove the grates, grease collector and stainless steel radiant and place in hot soapy water. Clean the grill with hot soapy water and a soft grill brush.

DO NOT APPLY WATER OR CLEANER DIRECTLY TO THE INFRARED BURNER

GRIDDLE OPERATION *(GD Models Only)*

The built-in griddle is made of polished steel to provide a smooth cooking surface. A griddle drip pan is included.
Always pre-heat the griddle on the low setting, at least ten minutes before cooking. The griddle burner is equipped with a hot surface igniter and gas safety valve system.

To Start Cooking:

- » Push knob in and turn the knob counter-clockwise to the MAX position. Preheat griddle for two to three minutes and turn knob to the desired temperature setting.
- » The blue indicator light comes on and stays on until the pre-selected temperature setting is reached and then turns off and on with the heating cycle.
- » For best results, add a small amount of butter, oil, or a cooking spray to the griddle surface. Fatty meats like bacon and sausage do not need extra fat.

Season the Griddle:

1. The griddle has a factory applied coating that must be washed off prior to use. *(See Cleaning the Griddle)*
2. Pour 1 tablespoon of vegetable oil *(not corn or olive oil)* and rub on the entire surface of the griddle using a rough towel.
3. Push the griddle control knob in and turn to a medium setting *(350°F)*.
4. Heat until griddle begins to smoke. Turn off griddle and allow it to cool.
5. Returning to step 2, repeat the process.

When you are done "griddling" and while the griddle surface is still warm, remove any left-on food particles. Allow the griddle to cool and scrape off any excess grease from the surface with a flexible nylon spatula. Pull the spatula forward toward the front and push any material into the front grease receiver.
To clean the griddle, moisten a soft scrub cloth, adding a drop of mild degreaser dish soap to create a soapy lather - and wipe the griddle from left to right. Clean in rows from the top to the bottom, taking time to wash the entire griddle surface, including the sides. When you are done, rinse away all the soap from the cloth and wipe any suds from the griddle surface. Remove all remaining moisture from the griddle with the second, clean soft cloth. Wipe the area in rows again as well as the sides and front. You may have to repeat action to ensure the griddle plate is dry and sparkling.

Cleaning the Griddle:

- » The griddle is not to be removed for cleaning.
- » Using a flat plastic spatula gently remove burned on food.
- » Clean the griddle thoroughly with hot soapy water and a rough towel.
- » Clean the griddle drip pan and trough after each use with hot soapy water and a sponge.
- » It is normal for the griddle to darken with age and use, similar to commercial cooking equipment.

GRIDDLE CHART		
FOOD ITEM	TEMP. SETTING	HEAT SETTING
Eggs	225°F to 250°F	Low
Bacon, Ham, Hot dogs	300°F to 325°F	Medium - Low
Sausage, Grilled cheese sandwiches	325°F to 350°F	Medium
Pancakes, French toast	350°F to 375°F	Medium
Hash brown potatoes, Grilled onions	400°F to 425°F	Medium - High

The temperature settings are meant as a guide. You may need to adjust the settings according to your peronal cooking preferences.

CARE & CLEANING

DRYING AND DEHYDRATING

While the United States Department of Agriculture advises: DO NOT hold foods at temperature between 40°F to 140°F more than 2 hours – and cooking raw foods below 275°F is not recommended, the low setting of the oven *(ranging from 150°F to 225°F)* may be used to keep food hot and in special recipes, used to dehydrate fruits and vegetables.

During dehydration, the convection fans circulates hot air over the food, causes moisture to escape from the food surface – generally drying it out. This removal of water inhibits growth of microorganisms and slows down the activity of enzymes. Starting with only the freshest, best quality food items, prepare as directed and:

- » Place the food on drying racks spaced evenly in the oven cavity.
- » Set the temperature control to 200°F and switch on the convection fan.
- » Remember to periodically check the food items for dryness state.

CARE AND CLEANING

It is always easier to clean as you go – and while some evenings you'd rather sit down with a good book instead of a Scrubby, keeping your range cooktop and oven in a ready to go state for the next meal makes everything a little more tolerable.
When cleaning the range:

- » Use the mildest procedure that will do the job efficiently and effectively – and since some cleaners are harsher than others, it is best to try them on a small, inconspicuous area first.
- » Use only clean, soft cloths, sponges, paper towels, plastic brushes, non-metal soap pads for cleaning and scouring.
- » When cleaning the oven door, control panel, top curved section *(called the bull nose)* or the flat top area – always pretend it is made of wood – and rub the finish in the direction of the grain. This is the most effective cleaning direction, to prevent marring the surface.
- » Any part of this appliance can be cleaned with hot, sudsy water. When rinsing is required, rinse thoroughly.
- » Always wipe dry immediately to reduce the appearance of water marks.

To Clean the Cooktop

The cooktop is brushed Stainless Steel with polished aluminum burner heads. The burner caps are steel coated porcelain.

- » Do not use abrasives on Stainless Steel. Use towels, sponges or soft plastic scrubbers. **RUB ONLY WITH THE "GRAIN".**
- » Do not use steel wool pads or green rough Scrubby's.
- » Wash all cooking surfaces with hot water and dish detergent such as Simple Green, Ivory Liquid, or Joy.
- » Rub stubborn spots with baking soda or liquid cleaner such as Windex All Surface Cleaner or 409.
- » Grates and burner caps can be soaked in hot soapy water. Mild scouring cleaners can be used, such as Bon Ami or Cameo on
- » grates and burner caps.

To Clean the Oven

The oven cavity is porcelainized with steel rack guides and racks. The infrared broiler does not need to be cleaned. Any soil is burned off by the intense heat.

- » Place a medium glass baking dish filled with two cups of ammonia. Close the door and allow the dish to sit overnight. This process softens the soil for easier removal.
- » Wash the interior of the oven with soap and water. Make a paste with baking soda and water and using a sponge or nylon pad rub away stubborn stains.
- » Use mild scrubbing compounds such as Bon Ami or Cameo if necessary.
- » Do not use steel wool pads or abrasive sponges or scrubbers.
- » If necessary, oven cleaner can be used. **DO NOT SPRAY OVEN CLEANER INTO THE CONVECTION FANS OR UP ONTO THE INFRARED BROILER.**
- » When spray oven cleaners are used, follow using a 1/4 cup vinegar mixed with one quart of water to rinse the oven.
- » Do not use scouring powders on the glass window; oven spray may be used on the window. Rinse with vinegar and water solution.

CARE & CLEANING

CLEANING RECOMMENDATIONS		
PART / MATERIAL	**CLEANING SUGGESTIONS**	**BEING CAREFUL**
Main Top/ Porcelain Enamel	Soft Scrub may be used here. With a cool or slightly warm surface, use a damp sponge or cloth as recommended by the manufacturer.	Since the surface is glass *(it can be scratched by certain materials)* try to rub gently in small circles to allow time and chemical reactions to take place.
Sealed Burners *(Cuisine)*	Caps and burner heads can be removed for cleaning using hot sudsy water. A stiff nylon bristle tooth brush can be used to clean burner port openings.	Remember to dry out the ports *(try to blow air through them if you like)*. Water clogged ports burn with erratic flames and could be dangerous.
Open Burners *(Performer)*	The cast iron burner heads are heavy and porcelain coated. If they are dirty, remove any large debris and gently scrub under hot, soapy water.	Like the sealed burners, remember to dry out the ports *(try to blow air through them if you like)*. Water clogged ports burn with erratic flames and could be dangerous.
Control Knobs/ Powder Paint	Use dry hands to pull off the knobs; hot sudsy water works best here…	…with a sponge to avoid scratching
Chrome Knob Bezels	Hot soapy water works well here, with a sponge or soft cloth.	As with any round feature that meets the stainless steel grain, be careful to clean the bezels in a circular motion – and not contact the stainless steel control panel.
Exterior Finish Island Trim	Use hot soapy water, Fantastic, Formula 409, rinse and dry immediately. For hard water spots, try household vinegar or CLR. If there is any heat discoloration, consider using Zud, Wright's All Purpose Polish or Blue Away.	Rub lightly in the direction of the grain of the stainless steel. Salt *(sodium chloride)*, chlorine or chlorine compounds in some cleaners are corrosive to Stainless Steel.
Grates/Porcelain Enamel on Cast Iron	Hot water & detergent with scrubby, or soap filled steel wool pad for really tough stains will work.	Remove sugar or acid based spills, they tend to attack the enamel. Remember the grates are heavy, use care when lifting and replacing.
Griddle	Moisten a soft scrub cloth, adding a drop of mild dish soap to create a soapy lather - and wipe the griddle from left to right.	Use plastic spatulas and spoons when working the griddle. See more tips in the discussion on griddle operation above.

TROUBLESHOOTING		
PROBLEM	**POSSIBLE CAUSE**	**WHAT TO DO**
Oven will not heat	No electrical power to the range Gas service is turned off Gas supply has been interrupted Look for red glow of hot surface igniter	Check circuit breakers in house Try to light a surface burner Contact the gas company If no glow, call for service
Oven light does not work	Light switch is in the off position Light is burned out	Try switching the light on Locate and test a new replacement light, unscrew glass lens, remove bad light, replace
Broiler will not light	No electrical power to the range Gas service is turned off Look for red glow of hot surface igniter	Check circuit breakers in house Try to light a surface burner If no glow, call for service
Burner lights, but clicking won't stop	Mis-wired high voltage connections	See that the burners are correctly matched to the high voltage connections
Convection fan does not turn	Switch the fan on Unit in broil mode Bad fan	Use the control panel switch Turn thermostat to bake temperatures Call for service
Igniters keep clicking	Reverse polarity of the electrical supply line Poor electrical ground	Check the polarity with hand held tester Be sure range power cord has three prongs and plugs directly *(no adapter)* into the power receptacle
Condensation on the oven window	Cold appliance	During cold weather, it is normal for some condensation to appear of the window, it will disappear in about ten minutes.
Foods over-cook	Defective thermostat Incorrect temperature or cooking time	Watch that thermostat indicator light cycles on and off every five or ten minutes at temperature Reduce cooking time or temperature

MODEL AND PARTS IDENTIFICATION

CUISINE & PERFORMER SERIES - RANGES

DESCRIPTION	ARP-530	ARR-636	ARR-436GD	ARR-436GR	ARROB-430	ARROB-636	ARROB-436GD	ARROB-436GR	ARROB-848	ARROB-648GD	ARROB-648GR	ARROB-448GDGR	ARROB-4482GD	ARROB-4482GR	ARROB-6602GD	ARROB-6602GR	ARROB-660GDGR
Oven Racks	2	2	2	2	2	2	2	2	2	2	2	2	2	2	2	2	2
Rangetop Burners	5	6	4	4						6	6	4	4	4	6	6	6
Star Burners					4	6	4	4	8	6	6	4	4	4	6	6	6
Center Plate					1												
Burner Grates	3	3	2	2	2	3	2	2	4	3	3	2	2	2	3	3	3
Control Knobs	6	7	6	6	5	7	6	9	10	9	8	8	8	10	10	10	10
Griddle			1				1			1		1	2		2		1
Backyard Grill				1				1			1	1		2		2	1
Regis. Card	1	1	1	1	1	1	1	1	1	1	1	1		1		1	1
Island Back	1	1	1	1	1	1	1	1	1	1	1	1	1	1	1	1	1
U&C Manual	1	1	1	1	1	1	1	1	1	1	1	1	1	1	1	1	1

Oven Racks: Each oven is supplied with two heavy chrome-plated adjustable oven racks.

Rack Supports: On each side of the oven, heavy chrome-plated rack supports allow five positions, numbered from the bottom up.

Oven Control Knob: The oven control knob is used to set the Baking temperature or to select the Broil function. During baking, the convection fan may be activated.

Bake Burner: The Bake burner is located in the center of the oven, below the oven bottom and is activated by the Oven Control Knob.

Ceramic Tile Infrared Broil Burner: Positioned in the oven ceiling, burning gas heats the ceramic tile to a temperature of 1,850°F – creating searing heat similar to the glowing coals of a wood fire.

Broil Burner Igniter: The igniter glows a very hot, bright red-orange color, reaching proper ignition temperature to light the Ceramic Tile Infrared Broil Burner.

Burner On Indicator Light: Whenever an oven burner is activated *(either Bake or Broil)*, the burner on indicator will glow. It is normal for the indicator light to cycle off and on during baking or broiling – showing that the requested temperature has been achieved – or that more heat is required.

Door Gasket: The door gasket is made from high temperature materials and creates a seal between the hot oven and the cool kitchen.

Convection Fan and Switch: Operated by the front panel switch, the convection fan circulates oven air, removing the "thermal boundary layer" on items being baked – and in doing so – speeding up heat transfer and cook time by as much as 25%. Convection is active only during baking.

Oven Light and Switch: A single lamp is provided in the oven to illuminate baked and broiled food items, as well as shed some light on the wall to help during clean-up – activated by the front panel switch.