BI-36F SYSTEMS PARTS LIST

Ref #	Part #	Description
1	7002076	Screw, Comp Mounting
2	3150010	Mount, Rubber #70456-1
3	6201580	Screw,#8-36 X 1/2 Nylon Patch
4	7011248	Bracket, Cond Fan Motor Svce
5	4200740	Motor Pkg, Cond Fan
6	3220360	Grommet, Mtg Brkt
7	7006971	Fan Blade, Condenser Svce
8	7006984	Enclosure, Control Board Svce
9	7018446	Control Assy, Board Svce
10	7006976	Cover, Control Housing Svce
11	7006955	Support, Control Board Svce
12	7006956	Grille, Control Area Svce
13	7006979	Drain Pan, Svce
14	7006990	Heater, Drain Pan Svce
15	7006982	Base Assy, Cabinet Svce
16	7006980	Support, Drain Pan Svce
17	7006969	Divider, Air Svce
18	7003021	Plug, 7/8 Nyl hole Black
19	7006985	Bracket Assy, Cabinet Roller Svce
20	3550560	Straight Pin, Base Assy - .312" x 2.88"
21	3450620	Clip, Canoe
22	3570050	Leg, Leveling
23	3421240	Cabinet Roller
24	6111000	Screw, Adjusting 1/4-20 X 20.5
25	7009311	Bracket, Anti-Tip Pkg Svce (2 Brackets)
26	7006977	Cord, Power DOM Svce
27	7006952	Duct, Shell Back Svce
28	7006951	Duct, Shell Upper Back Svce
29	6150410	Nut, 1/4-20
30	7011251	Foam, Condenser Svce
31	7006964	Drier, High Side Svce
32	7006965	Bracket, Drier Svce
33	NA	
34	NA	
35	NA	
36	NA	
37	7007859	Shroud Assy, Cond Svce (Incl. Fan)
38	7007864	Switch, Filter Reset Svce
39	7005017	Water Filter Assy, Rplcmnt (Sales Acc.)
	7009931	Water Filter Rplcmnt CTO (Sales Acc.)
	7007863	Filter,Water Svce (Needs Special Auth)
	7012974	Fltr,Wtr CTO Svce (Needs Spcial Auth)
	7005018	Plug, Water Filter Bypass (Sales Acc.)
40	7007862	Manifold, Water Filter Svce
41	7006978	Cover, Power Cord DOM Svce
42	7011255	Shroud Assy, Unit Svce
43	7010300	Unit Tray, Svce
44	NA	
45	7011256	Shroud Assy, Compressor Svce
46	7007861	Condenser, Fre Svce
47	7009446	Compressor Assy, EGX90HLC Svce
48	7011278	Electricals, EGX90 TSD Svce
49	7005578	Capacitor, 12Mf SVCE
50	7011277	Clip, TSD Electricals Svce
51	NA	
52	7011239	Evap, Fre Svce
53	7007841	Evap Assy, Fre Svce (Evap & Heat Ex)
54	7006981	Bar, Anti-Tip Svce
55	7007866	Bracket, Water Valve Svce
56	7007865	Valve, Water Single Svce
57	6200330	Screw, #8-18 x 3/8" Pan Head
58	6201890	Screw, #8-15X3/8, 6 Lobe Trhd
59	6201670	Screw, #8 Rivgrip
60	6200050	Screw, #10-12 x 1/2" Pan HD
61	6201930	Screw, 8-18 X 5/8 6-Lobe PH
62	7003824	Screw, #10X1/2, 6 Lobe Pan Hd
63	6201940	Screw,10-12 X 3/4 6-Lobe PH
64	7012440	Valve, Flow Control Svce
	NOT PICTURED:	
65	7010631	Tube, Water Svce (Supply to Filter)
66	7010652	Tube, Water Fltr to Valve Svce (Filter to Valve)
67	7010640	Tube, Water Svce (Valve to Flow Washer)
68	7010621	Tube, Water Svce (Flow Washer to I/M)
69	7010710	Bracket, Manifold Bypass Svce (To bypass water manifold)

BI-36F SYSTEMS VIEW

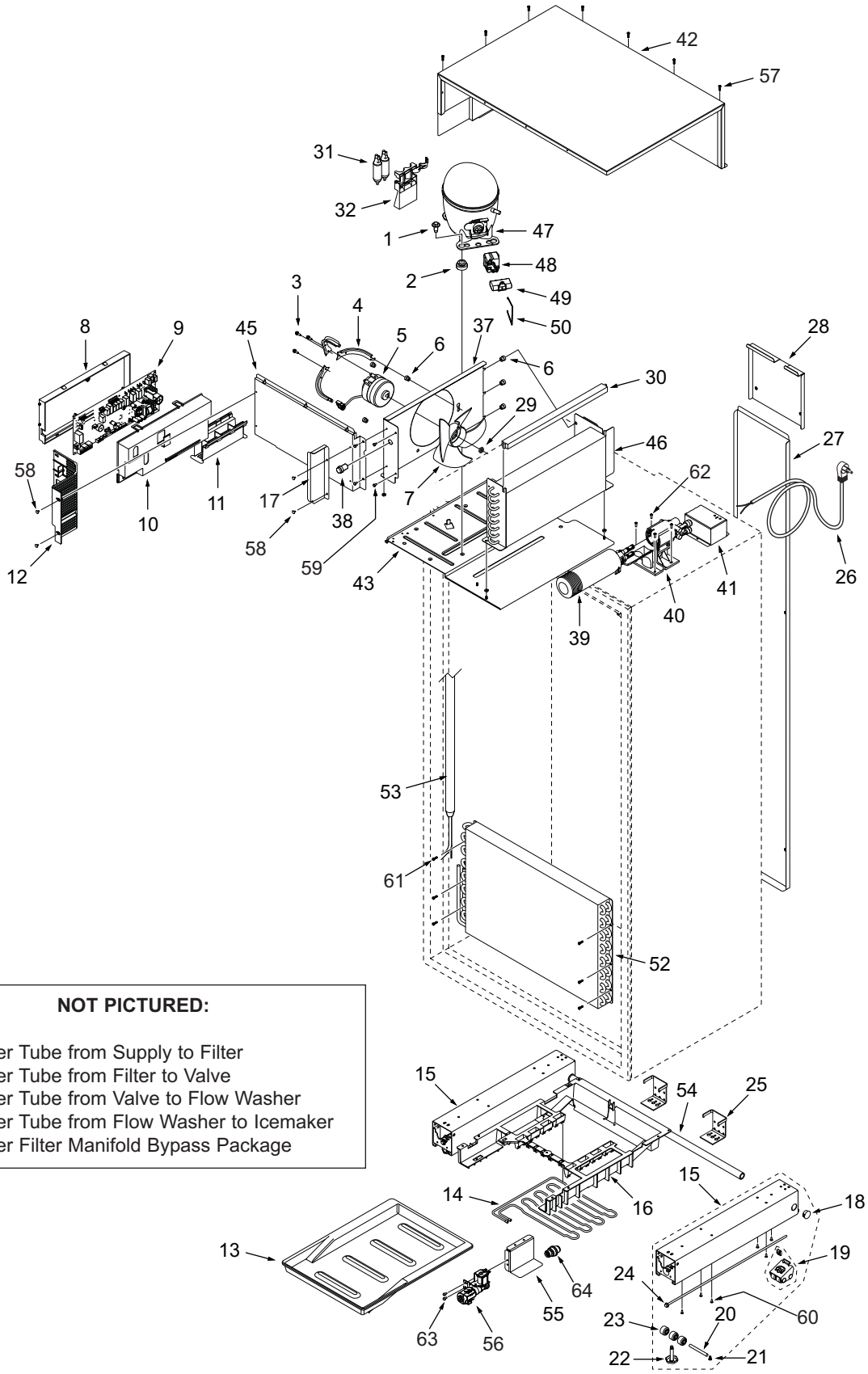

NOT PICTURED:

65	Water Tube from Supply to Filter
66	Water Tube from Filter to Valve
67	Water Tube from Valve to Flow Washer
68	Water Tube from Flow Washer to Icemaker
69	Water Filter Manifold Bypass Package