BLUESTAR

Parts Manual

Built-in 36”Wide Bottom Freezer Refrigerator

BBB36R2

February 2019

Table of Contents

Page	Description
1-2	Machine Compartment / Front Covers
3-4	Machine Compartment Top
5-6	Machine Compartment Right
7-8	Compressors
9-10	Control Panel / Inverter / Compressor Relay
11-12	Condenser / Hinge Bracket
13-14	Condenser Standoff / Electrical Plug
15-16	Condenser Fan Assembly
17-18	Control UI / Door Switch
19-20	Grill Assembly / Anti Tip Bracket
21-22	Water Filter / Water Valve Assembly
23-24	Waterlines / Back Covers
25-26	Refrigerator Evaporator
27-28	Shelf Ladder Assembly
29-30	Refrigerator Evaporator Fan Assembly
31-32	Refrigerator Drawer Slides
33-34	Refrigerator Lights / Freezer Lights
35-36	LED Assembly Crisper Drawer
37-38	Refrigerator Rear Covers / Shelves
39-40	Doors
41-42	Refrigerator Door Handle / Freezer Door Handle
43-44	Refrigerator Door Assembly (RH)
45-46	Door Bin Assembly
47-48	Dairy Bin Assembly
49-50	Cookie Drawer Assembly
51-52	Snack Drawer Assembly
53-54	Crisper Drawer Assembly
55-56	Freezer Evaporator / Defrost Heater
57-58	Freezer Evaporator Fan Assembly
59-60	Freezer Drawer Slides / Freezer Side Cover
61-62	Icemaker / Freezer Drawer Slides
63-64	Freezer Slide Support
65-66	Freezer Air Duct
67-68	Serpentine Assembly
69-70	Drain Pan
71-72	Freezer Basket / Ice Pan / Toe Grill
73-74	Roller Housing Assembly (LH)
75-76	Roller Housing Assembly (RH)
77-78	Drain Pan Fan Assembly
79-80	Freezer Door Assembly
81-82	Door Hinge Assembly

Machine Compartment / Front Covers

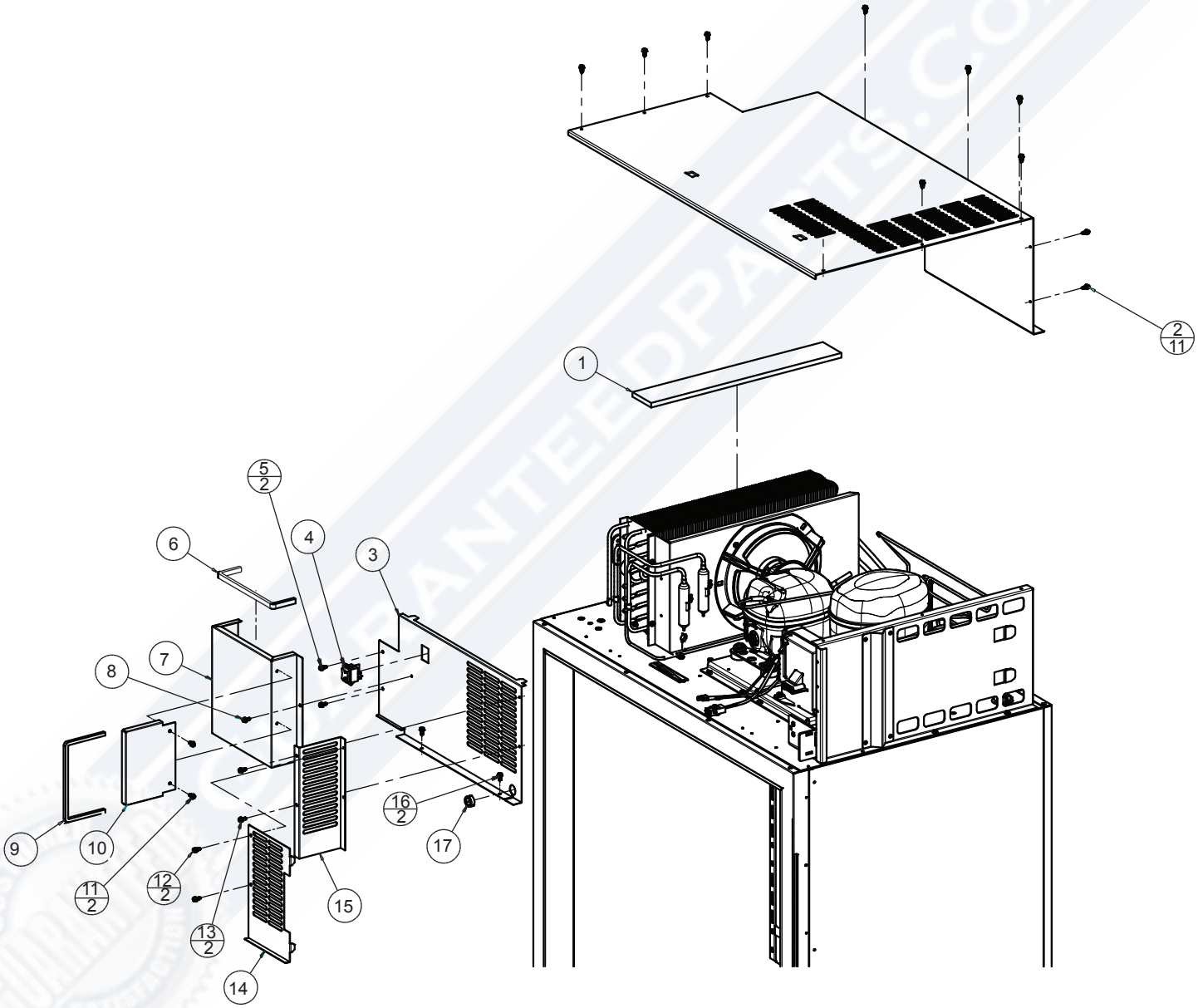

Machine Compartment / Front Covers

Reference Number	Part Number	Part Name	Quantity
1	799449	BLOCK-CONDENSER	1
2	300025	SCREW-8-18 x 1/2 SHEETMETAL	11
3	250168	MC FRONT COVER	1
4	703628	SWITCH-POWER	1
5	300025	SCREW-8-18 x 1/2 SHEETMETAL	2
6	799555	GASKET-CONDENSER FAN	1
7	250372	COVER-CONDENSOR COIL-RH	1
8	300025	SCREW-8-18 x 1/2 SHEETMETAL	1
9	799554	GASKET-MC AIR DAM	1
10	250327	AIR DAM	1
11	300025	SCREW-8-18 x 1/2 SHEETMETAL	2

GUARANTEEDPARTS.COM
CUSTOMER SATISFACTION GUARANTEED

Machine Compartment Top

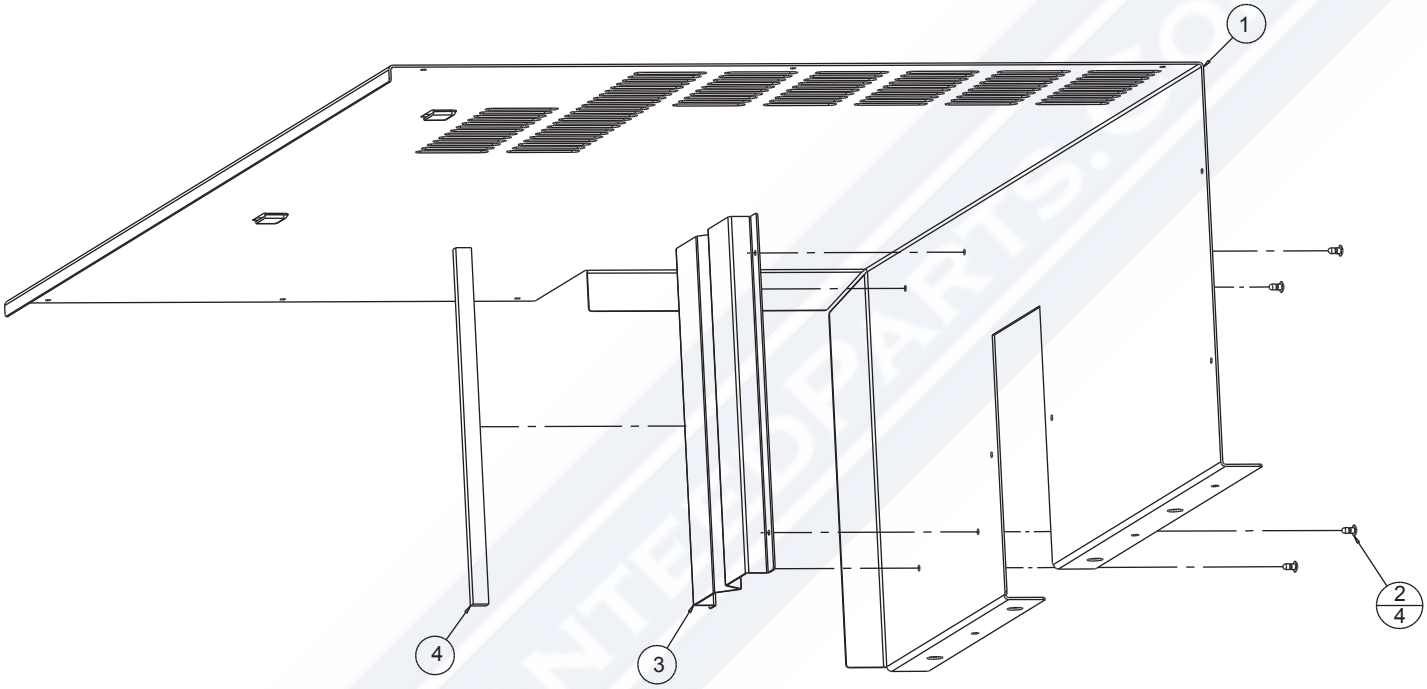

GUARANTEEDPARTS.COM
CUSTOMER GUARANTEED SATISFACTION

Machine Compartment Top

Reference Number	Part Number	Part Name	Quantity
1	250325	COVER-MC TOP	1
2	300003	RIVET-1/8" MULTIGRIP	4
3	250358	RECIEVER- FAN SHROUD	1
4	799660	GASKET-CONDENSOR REAR	1

GUARANTEEDPARTS.COM
CUSTOMER SATISFACTION GUARANTEED

Machine Compartment Right

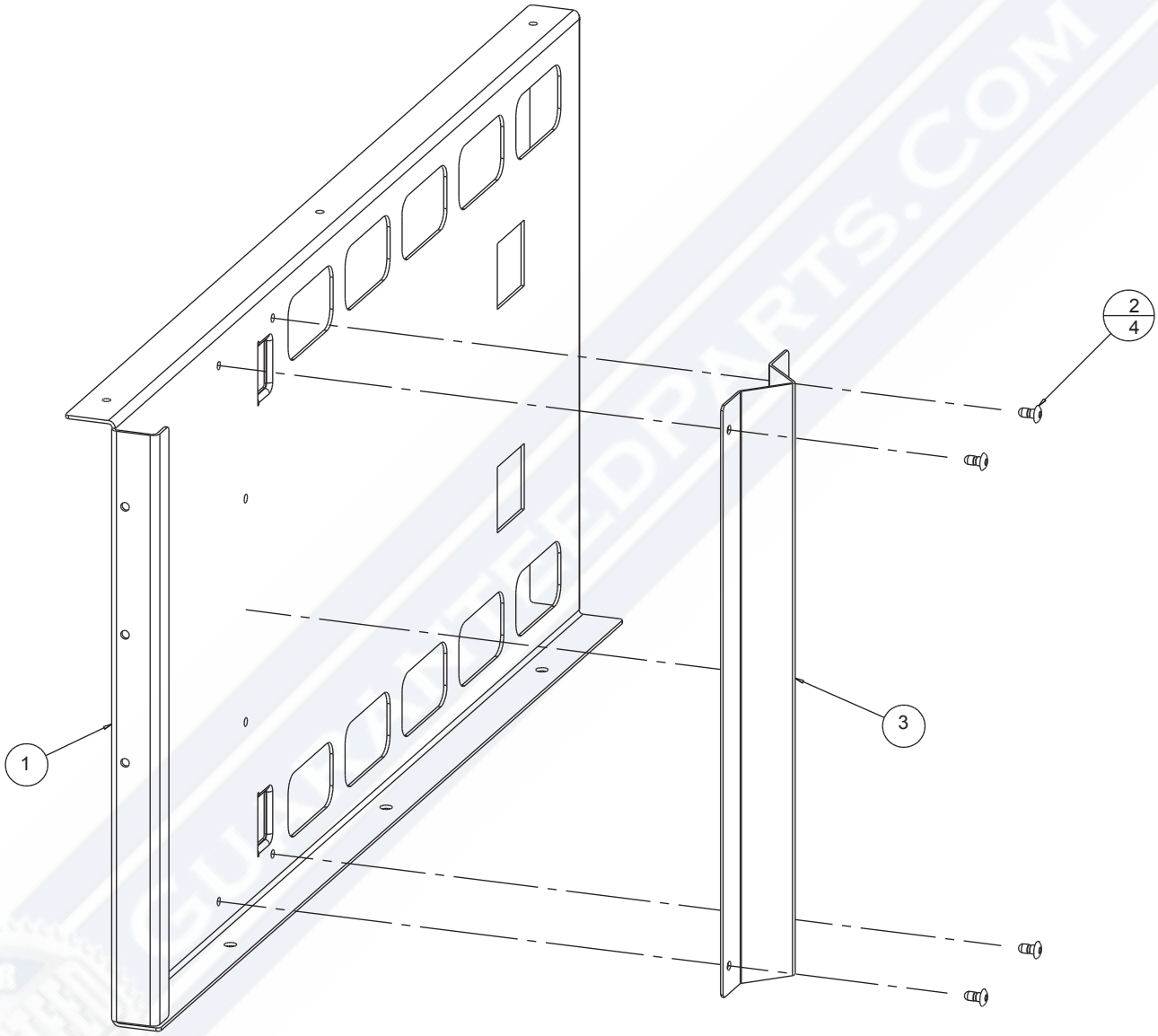

Machine Compartment Right

Reference Number	Part Number	Part Name	Quantity
1	250255	COVER-MC RH	1
2	300003	RIVET-1/8" MULTIGRIP	4
3	250292	COVER-SCREW MC SIDE	1

GUARANTEEDPARTS.COM
CUSTOMER GUARANTEED SATISFACTION

Compressors

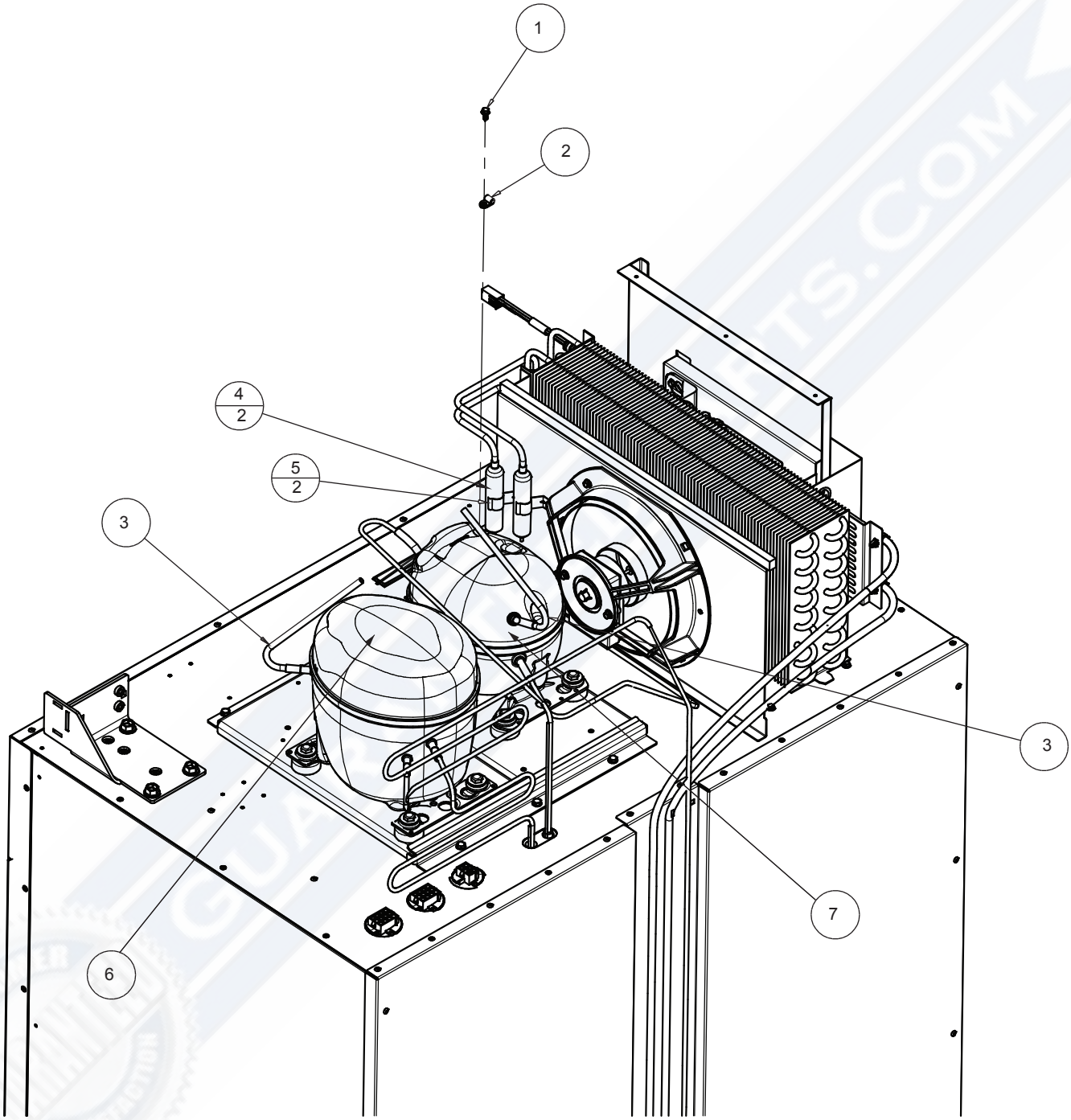

Compressors

Reference Number	Part Number	Part Name	Quantity
1	300025	SCREW-8-18 x 1/2 SHEETMETAL	1
2	799587	P CLAMP-3/16	1
3	799516	TUBE-COMPRESSOR PROCESS	2
4	799520	DRIER ASSEMBLY-SINGLE INLET	2
5	799688	CLIP-DRIER	2
6	799420	COMPRESSOR ASSY-FZ	1
7	799423	COMPRESSOR ASSY-REF	1

GUARANTEEDPARTS.COM
CUSTOMER SATISFACTION GUARANTEED

Control Panel / Inverter / Compressor Relay

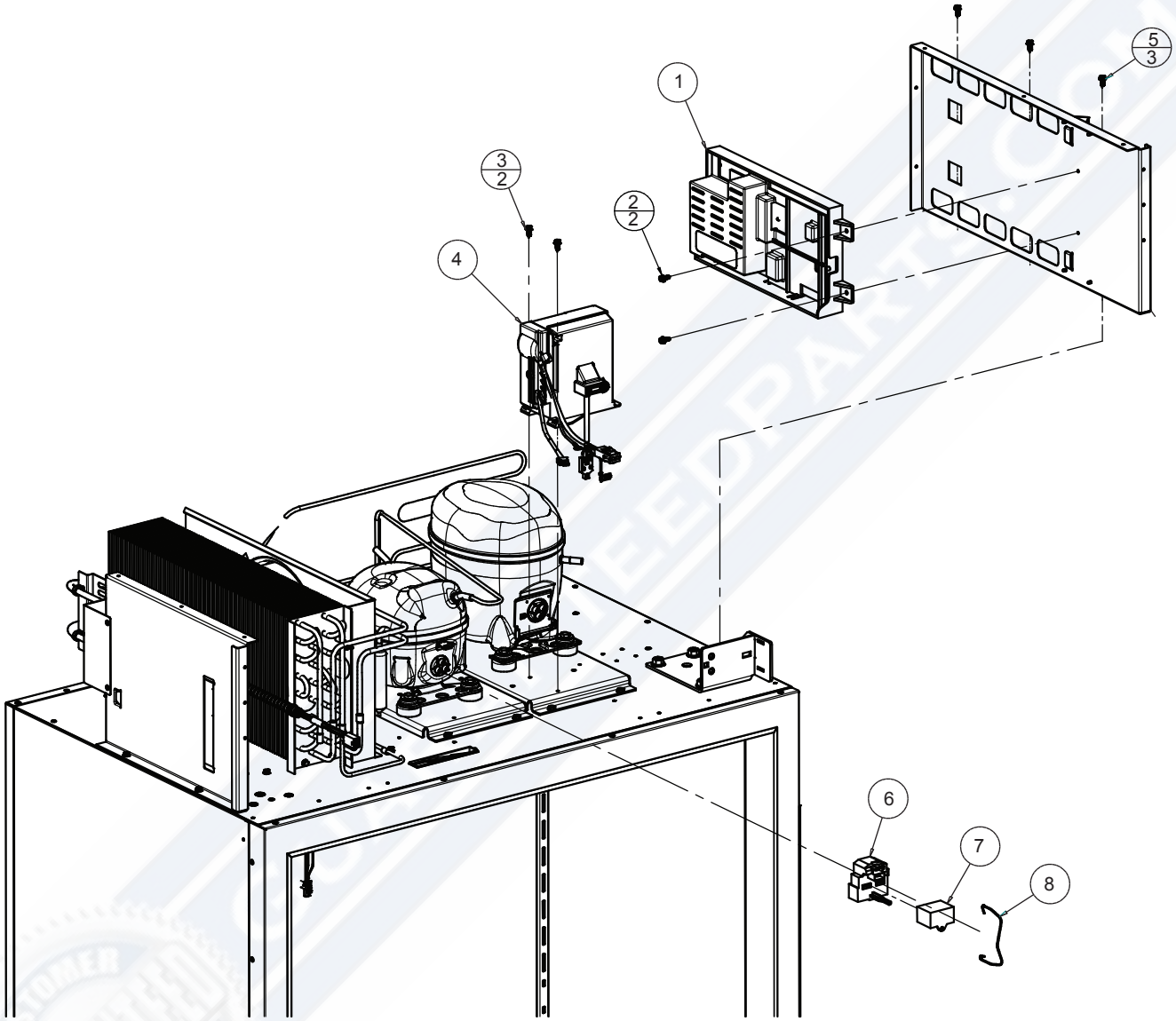

Control Panel / Inverter / Relay

Reference Number	Part Number	Part Name	Quantity
1	799846	ASSEMBLY-HI VOLT CONTROL	1
2	300025	SCREW-8-18 x 1/2 SHEETMETAL	2
3	300025	SCREW-8-18 x 1/2 SHEETMETAL	2
4	799464	INVERTOR	1
5	300025	SCREW-8-18 x 1/2 SHEETMETAL	3
6	799425	START DEVICE - COMPRESSOR, TDS	1
7	799432	CAPACITOR-COMPRESSOR	1
8	799569	CLIP-STARTER RELAY	1

GUARANTEEDPARTS.COM
CUSTOMER SATISFACTION GUARANTEED

Condenser / Hinge Bracket

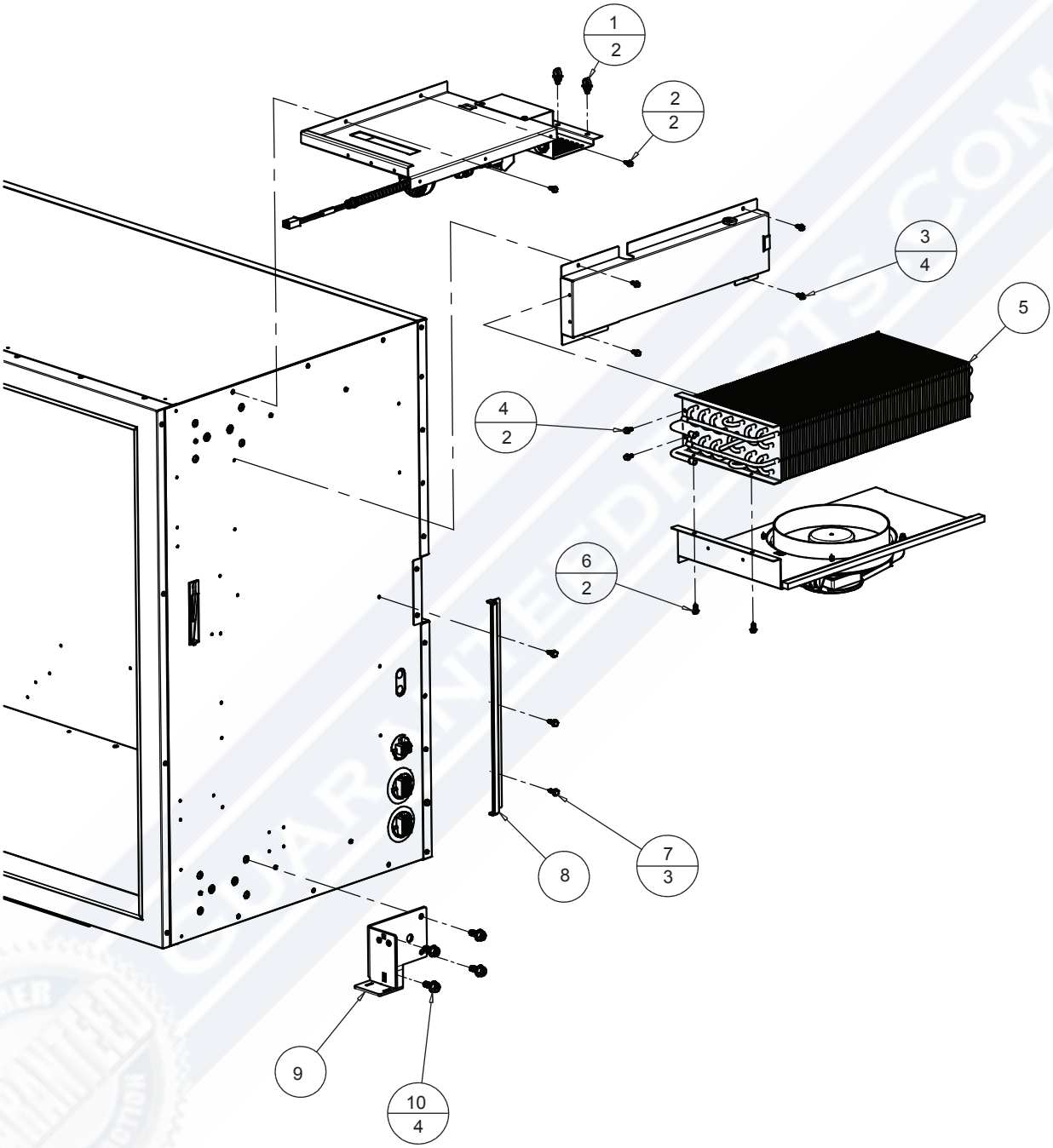

Condenser / Hinge Bracket

Reference Number	Part Number	Part Name	Quantity
1	799639	CLIP-SNAP IN 3/8	2
2	300025	SCREW-8-18 x 1/2 SHEETMETAL	2
3	300025	SCREW-8-18 x 1/2 SHEETMETAL	4
4	300025	SCREW-8-18 x 1/2 SHEETMETAL	2
5	799613	CONDENSER-DUAL EVAP	1
6	300025	SCREW-8-18 x 1/2 SHEETMETAL	2
7	300061	SCREW-10-16 x .625" HEX WASHER	3
8	250282	BRACKET-REAR COMPRESSOR TRAY	1
9	799609	TOP HINGE BRACKET ASSY (RH)	1
10	300029	SCREW-5/16"-3/4" WASHER FLANGE	4

GUARANTEEDPARTS.COM

Condenser Standoff / Electrical Plug

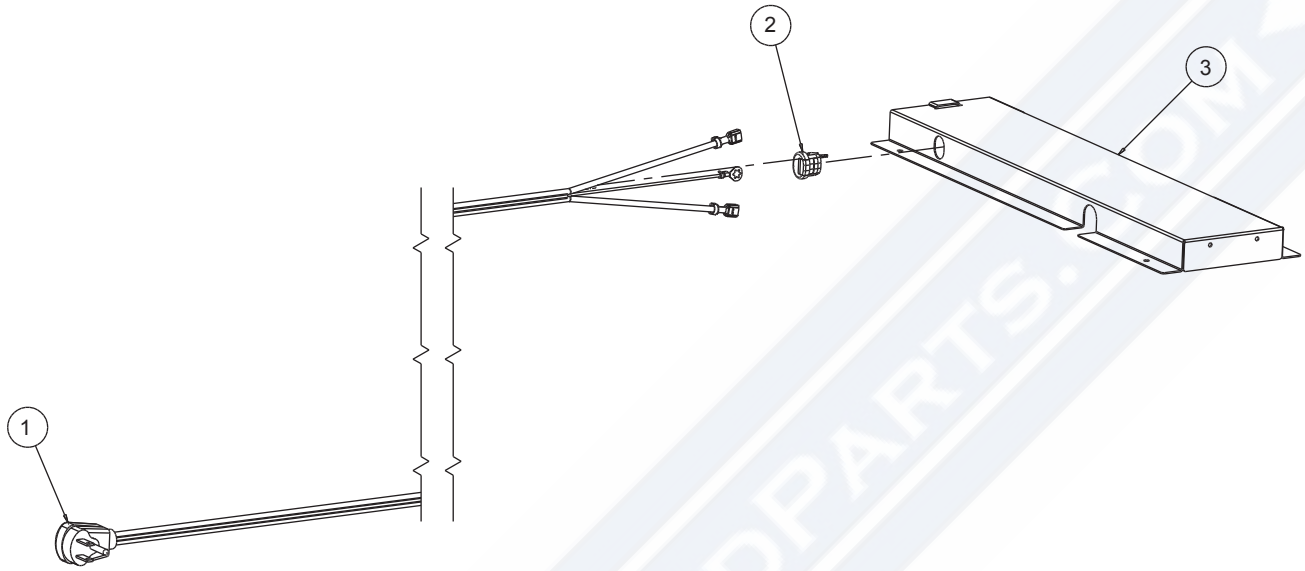

GUARANTEEDPARTS.COM

Condenser Standoff / Electrical Plug

Reference Number	Part Number	Part Name	Quantity
1	799427	POWER CORD	1
2	799585	BUSHING-STRAIN RELIEF	1
3	250339	STANDOFF-CONDENSOR	1

GUARANTEEDPARTS.COM
CUSTOMER SATISFACTION GUARANTEED

Condenser Fan Assembly

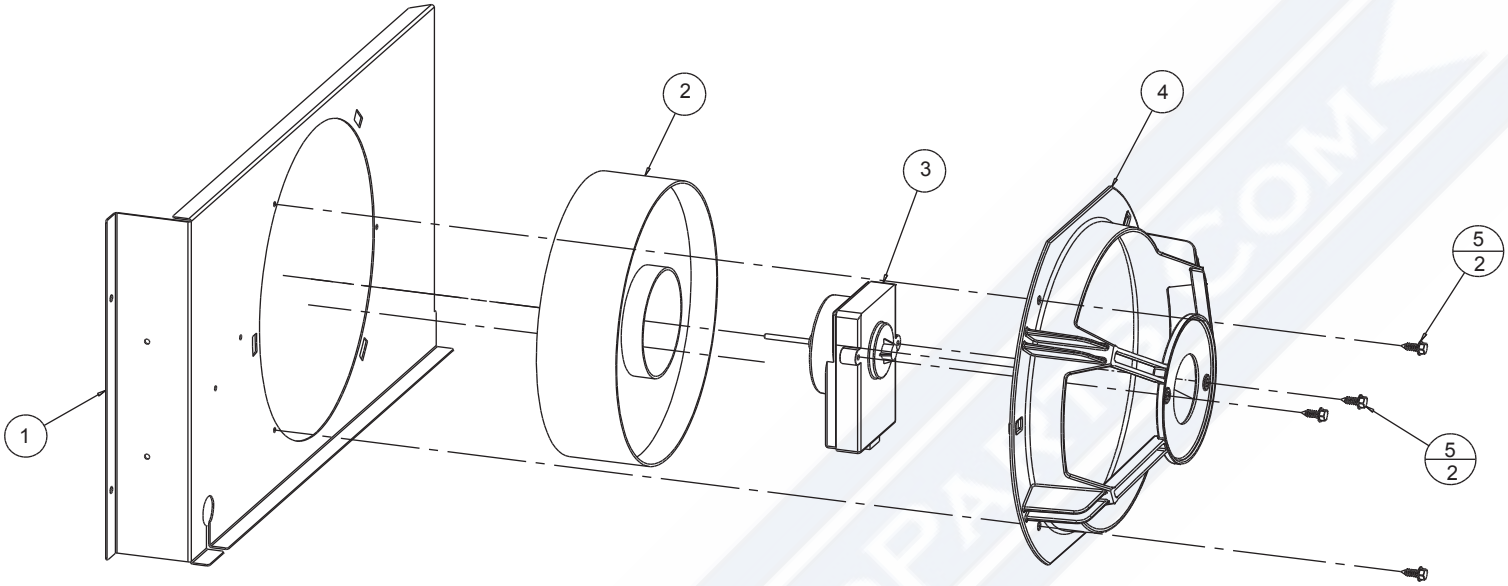

GUARANTEEDPARTS.COM

Condenser Fan Assembly

Reference Number	Part Number	Part Name	Quantity
1	250248	BRACKET-CONDENSOR FAN	1
2	799571	FAN BLADE-CONDENSER	1
3	703618	MOTOR-CONDENSOR FAN	1
4	799480	SHROUD-CONDENSOR FAN	1
5	300025	SCREW-8-18 x 1/2 SHEETMETAL	4

GUARANTEEDPARTS.COM
GUARANTEED CUSTOMER SATISFACTION

Control UI / Door Switch

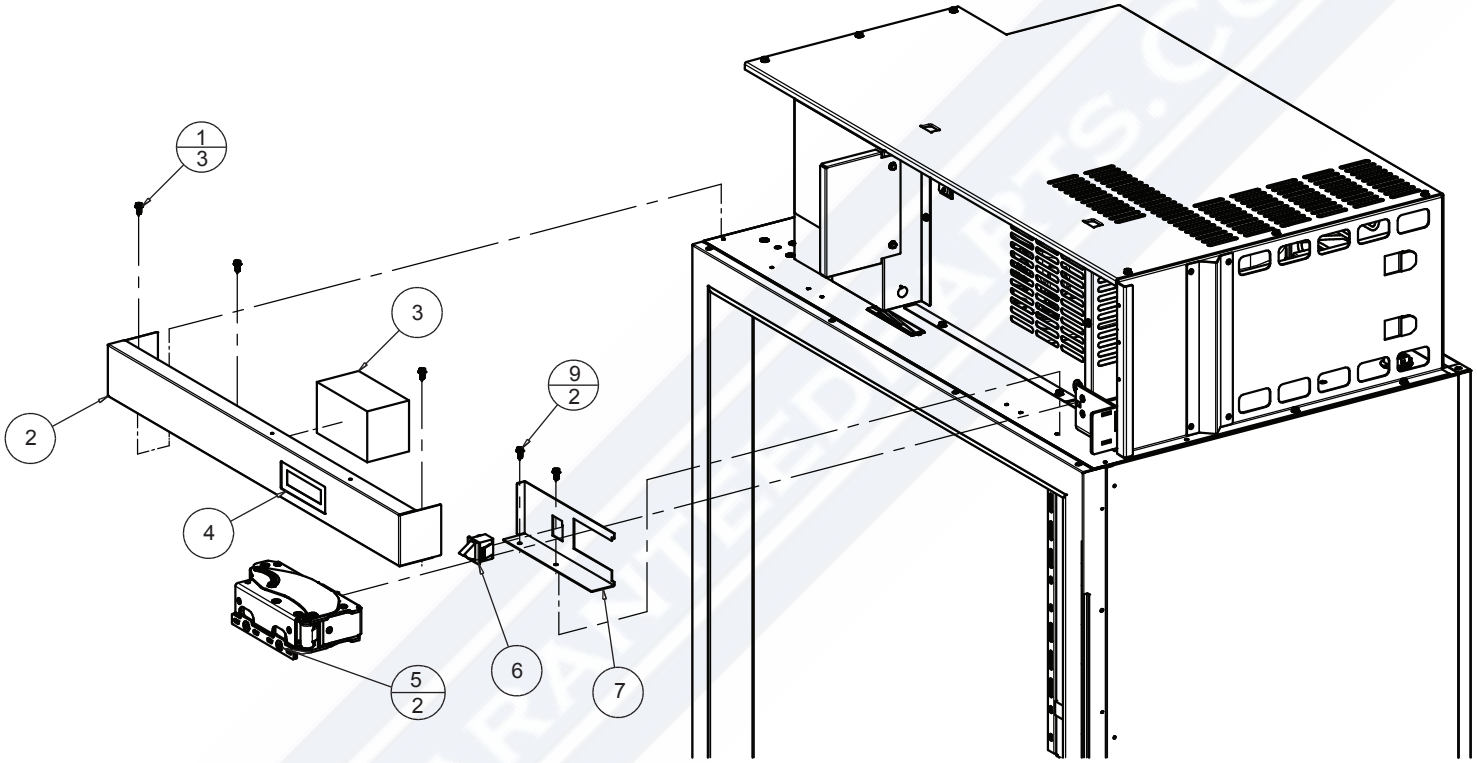

Control UI / Door Switch

Reference Number	Part Number	Part Name	Quantity
1	300025	SCREW-8-18 x 1/2 SHEETMETAL	3
2	550003	WELDMENT-FACIA UI-RH	1
3	799450	BLOCK-UI	1
4	799414	UI DISPLAY ASSEMBLY	1
5	300033	SCREW-M6-1.0 x 16mm (8.8)	2
6	703625	SWITCH-DOOR	1
7	250359	SWITCH PLATE-TOP HINGE RH	1

GUARANTEEDPARTS.COM
CUSTOMER SATISFACTION GUARANTEED

Grill Assembly / Anti Tip Bracket

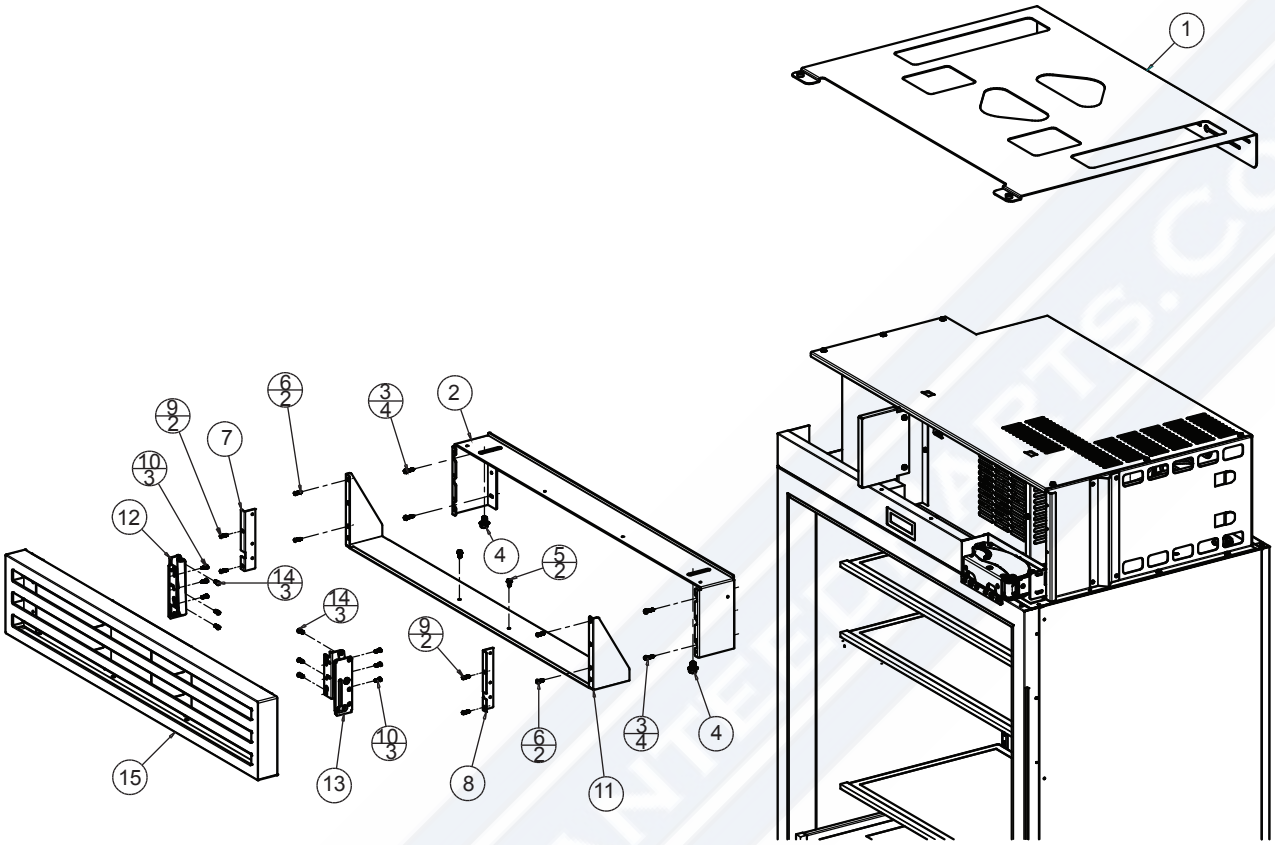

Grill Assembly / Anti Tip Bracket

Reference Number	Part Number	Part Name	Quantity
1	250377	ASSY-ANTI TIP BRACKET	1
2	799719	BRACKET-TOP GRILLE	1
3	300042	SCREW-8-18 x 3/4 SHEETMETAL	3
4	300028	SCREW-5/16"-1/2" WASHER FLANGE	1
5	300025	SCREW-8-18 x 1/2 SHEETMETAL	2
6	300050	SCREW-8-32 -1/2" TC F	2
7	250376	BRACKET-TOP HINGE LH	1
8	250375	BRACKET-TOP HINGE RH	1
9	300050	SCREW-8-32 -1/2" TC F	2
10	300050	SCREW-8-32 -1/2" TC F	3
11	250374	SHROUD-GRILLE	1
12	799642	HINGE-TOP GRILLE LH	1
13	799641	HINGE-TOP GRILLE RH	1
14	300050	SCREW-8-32 -1/2" TC F	2
15	799674	GRILLE-TOP	1

GUARANTEEDPARTS.COM
CUSTOMER SATISFACTION GUARANTEED

Water Filter / Water Valve Assembly

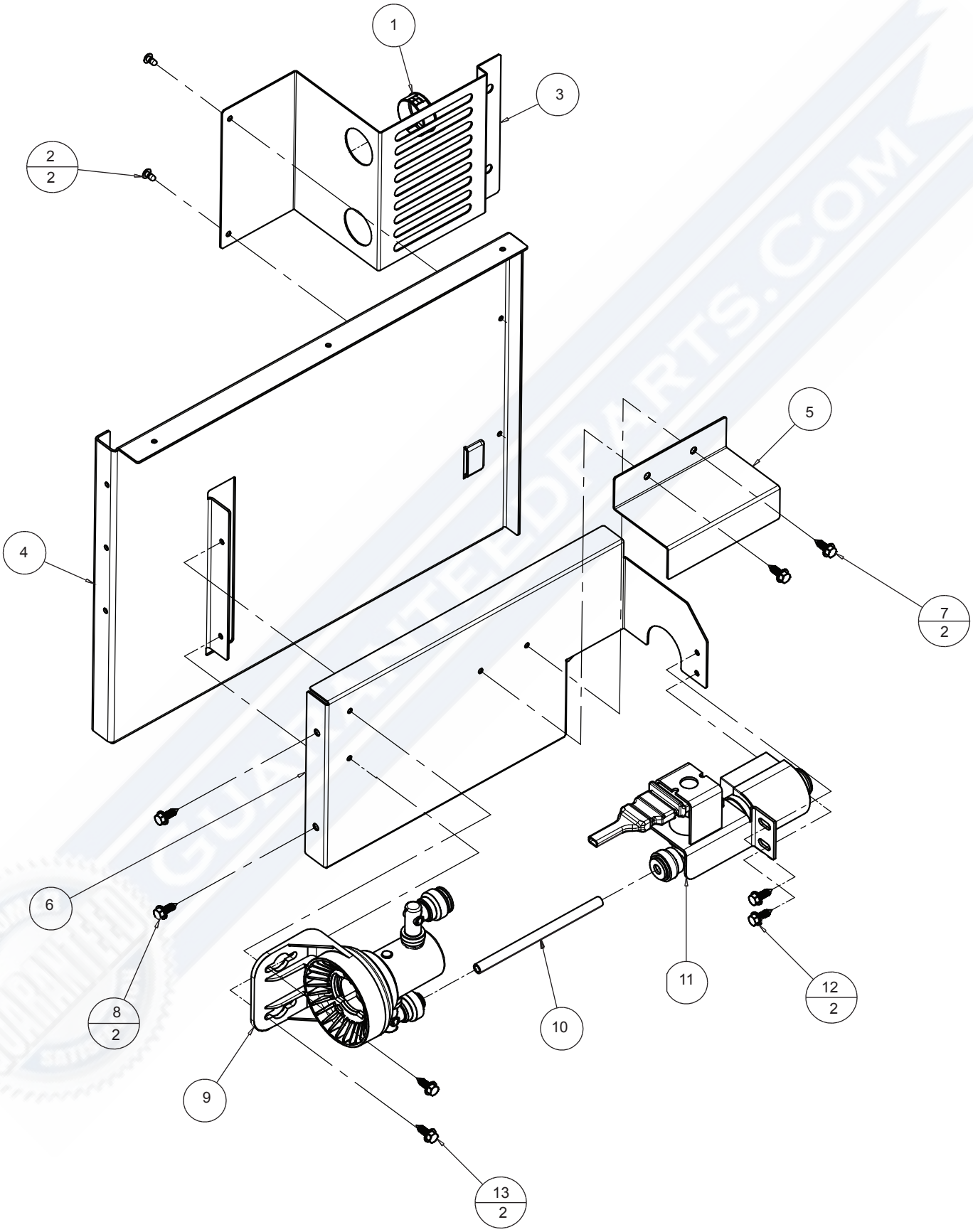

Water Filter / Water Valve Assembly

Reference Number	Part Number	Part Name	Quantity
1	799714	GROMMET- 1.000 DIA	1
2	300003	RIVET-1/8" MULTIGRIP	2
3	250354	BRACKET-WATERLINE	1
4	250405	COVER-MC LH	1
5	250316	SHIELD-WATER VALVE	1
6	250352	BRACKET-WATER FILTER	1
7	300025	SCREW-8-18 x 1/2 SHEETMETAL	2
8	300025	SCREW-8-18 x 1/2 SHEETMETAL	2
9	799437	FILTER-HEAD	1
10	799691	TUBE-FILTER/WATER VALVE	1
11	799690	WATER VALVE/HARNESS ASSEMBLY	1
12	300025	SCREW-8-18 x 1/2 SHEETMETAL	2
13	300025	SCREW-8-18 x 1/2 SHEETMETAL	2

GUARANTEEDPARTS.COM
CUSTOMER SATISFACTION GUARANTEED

Waterlines / Back Covers

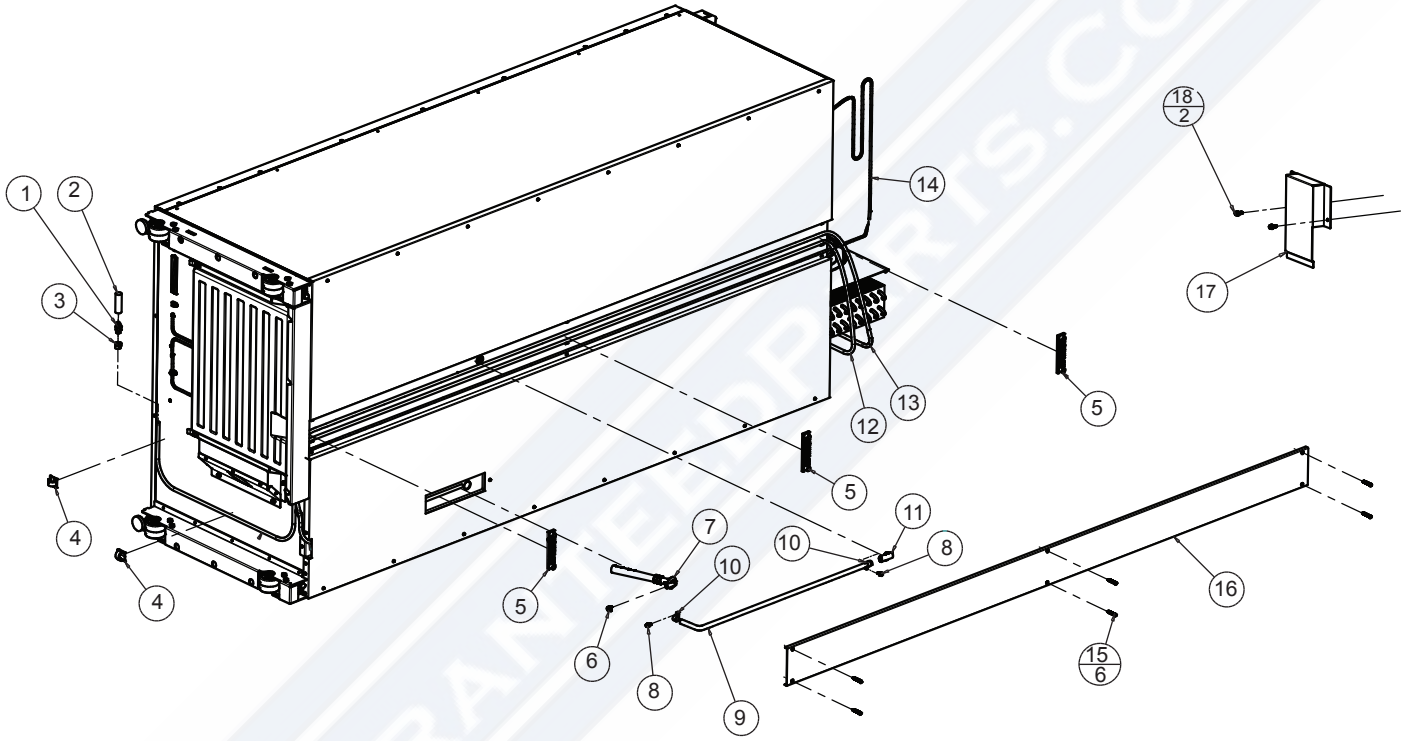

Waterlines / Back Covers

Reference Number	Part Number	Part Name	Quantity
1	799637	UNION-5/16 BARBLESS	1
2	799657	CAP-WATERLINE	1
3	799638	UNION RETAINER-5/16 BARBLESS	1
4	799624	CLIP-CORD	2
5	799661	CLIP-OUTER CASE CHANNEL	3
6	799665	CLAMP-WATERLINE	1
7	799620	FILL TUBE-ICEMAKER	1
8	300025	SCREW-8-18 x 1/2 SHEETMETAL	2
9	799630	TUBE-REF DRAIN	1
10	799668	P CLAMP-7/16	2
11	799629	TEE-REF DRAIN	1
12	731579	TUBE-SUPPLY LINE	1
13	799621	TUBE-ICEMAKER FILL	1
14	250368	DISCHARGE LINE-FZ	1
15	300053	SCREW-#8-18 x 1.25 CS SM	6
16	250361	COVER-OC CHANNEL	1
17	250362	COVER-OC CHANNEL TOP	1
18	300025	SCREW-8-18 x 1/2 SHEETMETAL	2

Refrigerator Evaporator

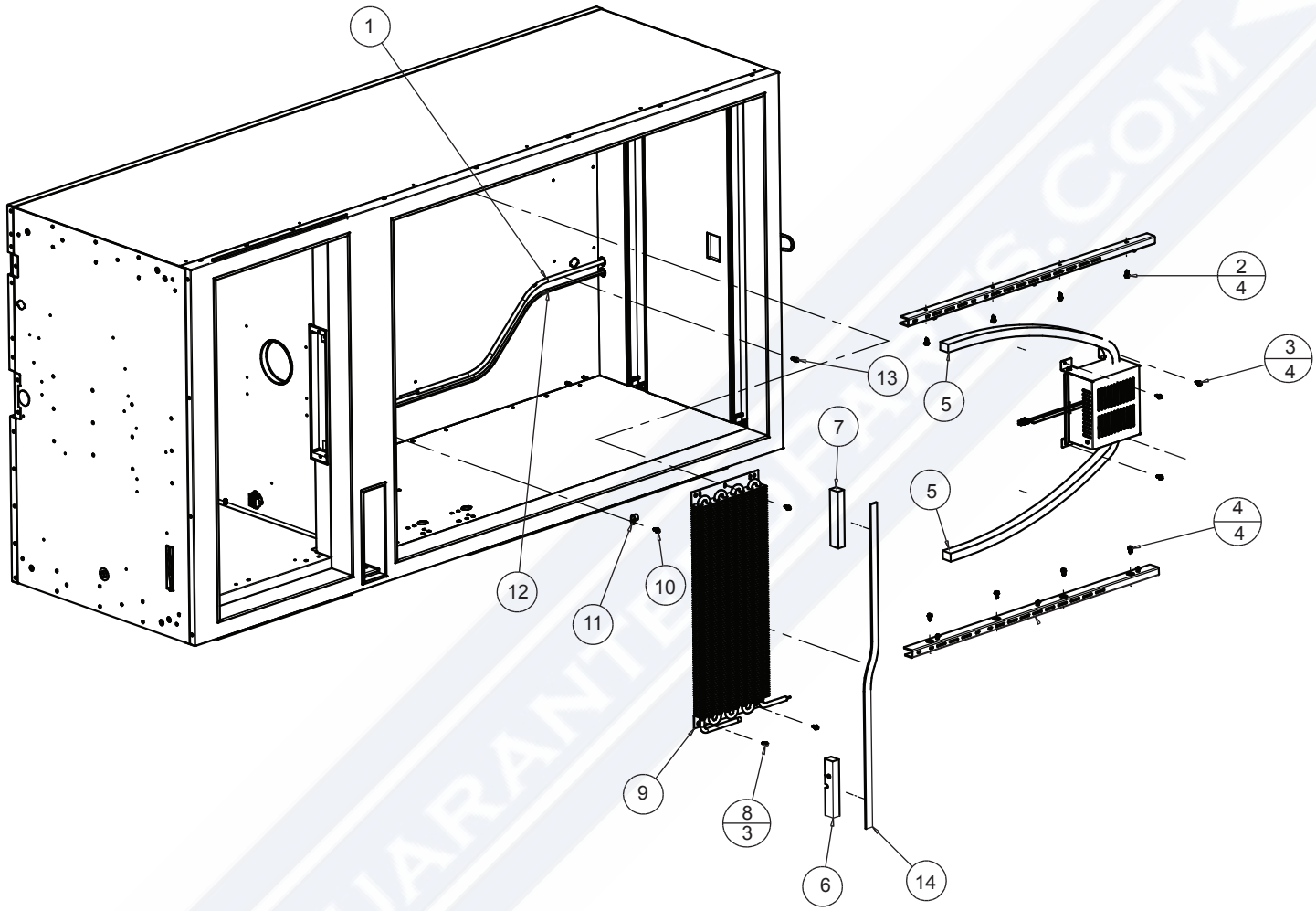

Refrigerator Evaporator

Reference Number	Part Number	Part Name	Quantity
1	799507	HEAT EXCHANGE/SUCTION TUBE-REF	1
2	300025	SCREW-8-18 x 1/2 SHEETMETAL	4
3	300025	SCREW-8-18 x 1/2 SHEETMETAL	4
4	300025	SCREW-8-18 x 1/2 SHEETMETAL	4
5	799489	GASKET-REF EVAP	2
6	799491	FOAM BLOCK-REF EVAP RH	1
7	799490	FOAM BLOCK-REF EVAP LH	1
8	300025	SCREW-8-18 x 1/2 SHEETMETAL	1
9	799465	EVAPORATOR-REF	1
10	300025	SCREW-8-18 x 1/2 SHEETMETAL	1
11	799668	P CLAMP-7/16	1
12	799508	HEAT EXCHANGE/SUCTION TUBE-FZ	1
13	300623	8-32x3/8" ZINC GROUNDSCREW	1
14	799550	GASKET-REF EVAP	1

GUARANTEEDPARTS.COM
CUSTOMER SATISFACTION GUARANTEED

Shelf Ladder Assembly

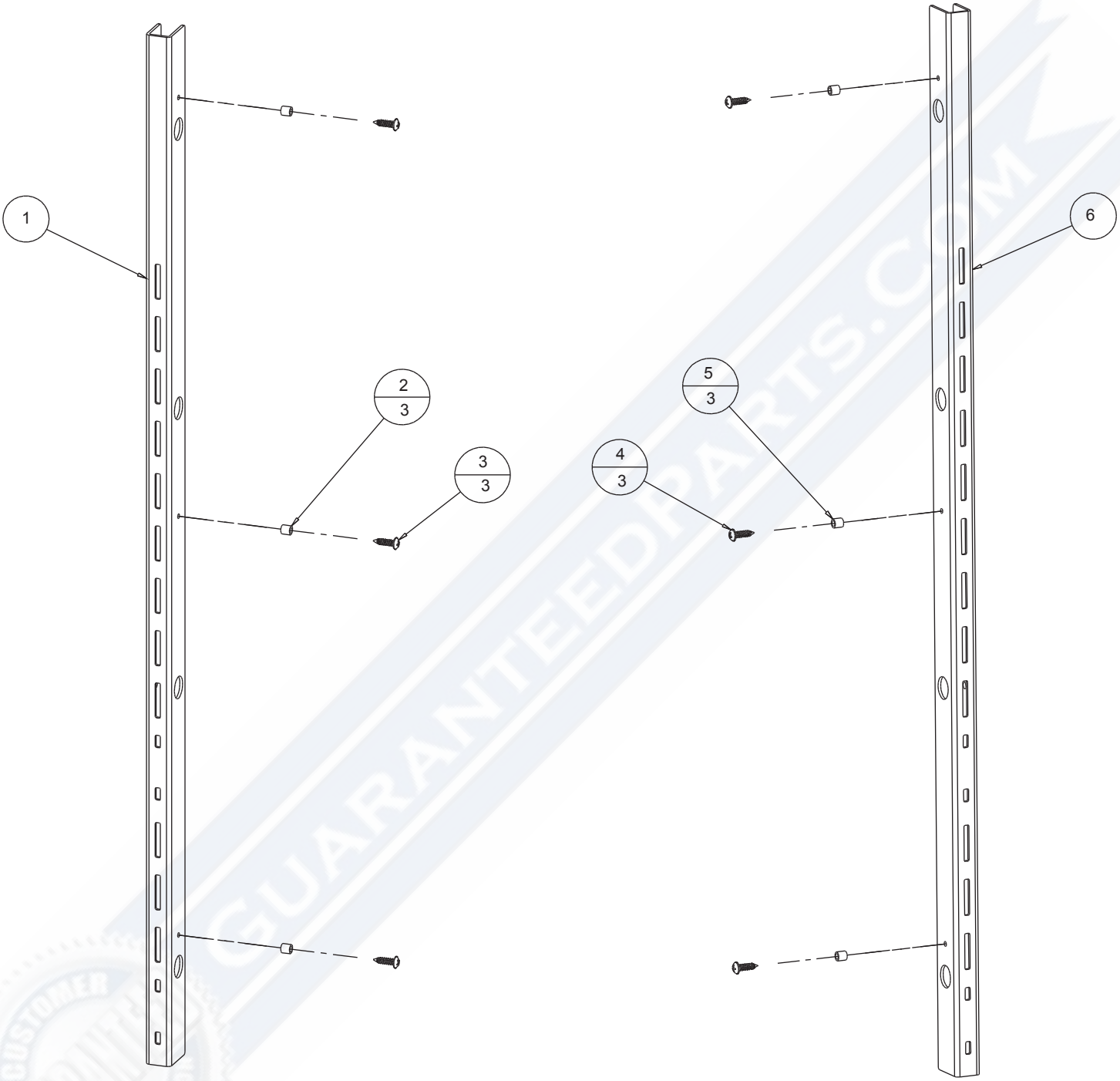

Left Hand **Right Hand**

GUARANTEEDPARTS.COM

Shelf Ladders

Reference Number	Part Number	Part Name	Quantity
1	799515	LADDER-SHELF (LH)	1
2	300052	SPACER-ALUM. UNTHREADED	3
3	300044	SCREW-8-18 x 5/8 SM WAX	3
4	300044	SCREW-8-18 x 5/8 SM WAX	3
5	300052	SPACER-ALUM. UNTHREADED	3
6	799514	LADDER-SHELF (RH)	1

GUARANTEEDPARTS.COM
CUSTOMER SATISFACTION GUARANTEED

Refrigerator Evaporator Fan Assembly

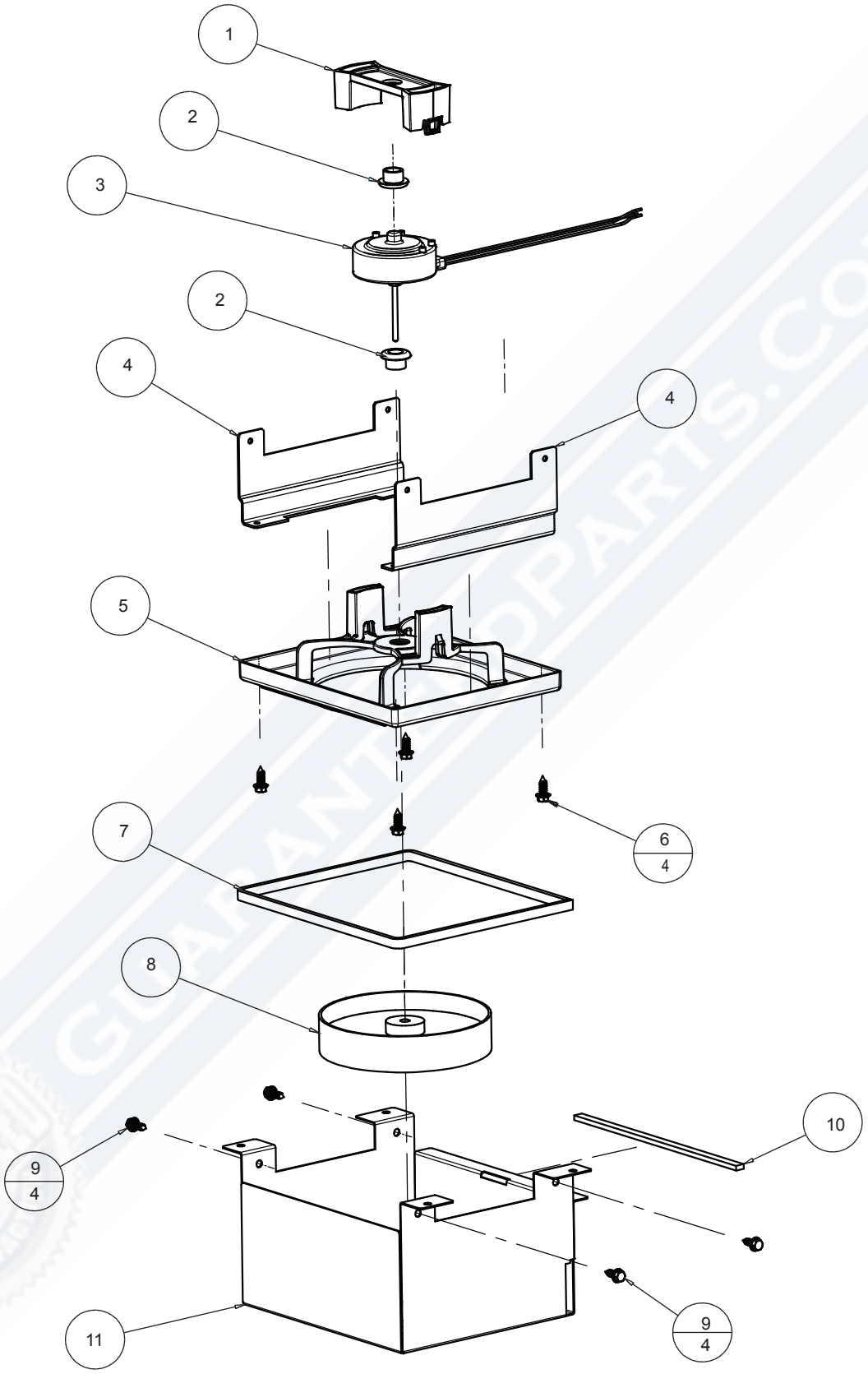

Refrigerator Evaporator Fan Assembly

Reference Number	Part Number	Part Name	Quantity
1	799479	CLIP-EVAP FAN	1
2	799634	GROMMET-EVAP MOTOR	2
3	799426	MOTOR-EVAP FAN	1
4	250241	BRACKET-REF EVAP FAN	1
5	799478	SHROUD-EVAP FAN	1
6	300025	SCREW-8-18 x 1/2 SHEETMETAL	4
7	799493	GASKET-REF EVAP FAN	1
8	799572	FAN BLADE-EVAPORATOR	1
9	300025	SCREW-8-18 x 1/2 SHEETMETAL	4
10	799492	GASKET-REF EVAP FAN	1
11	250390	GRILLE - REF EVAP	1

GUARANTEEDPARTS.COM
CUSTOMER SATISFACTION GUARANTEED

Refrigerator Drawer Slides

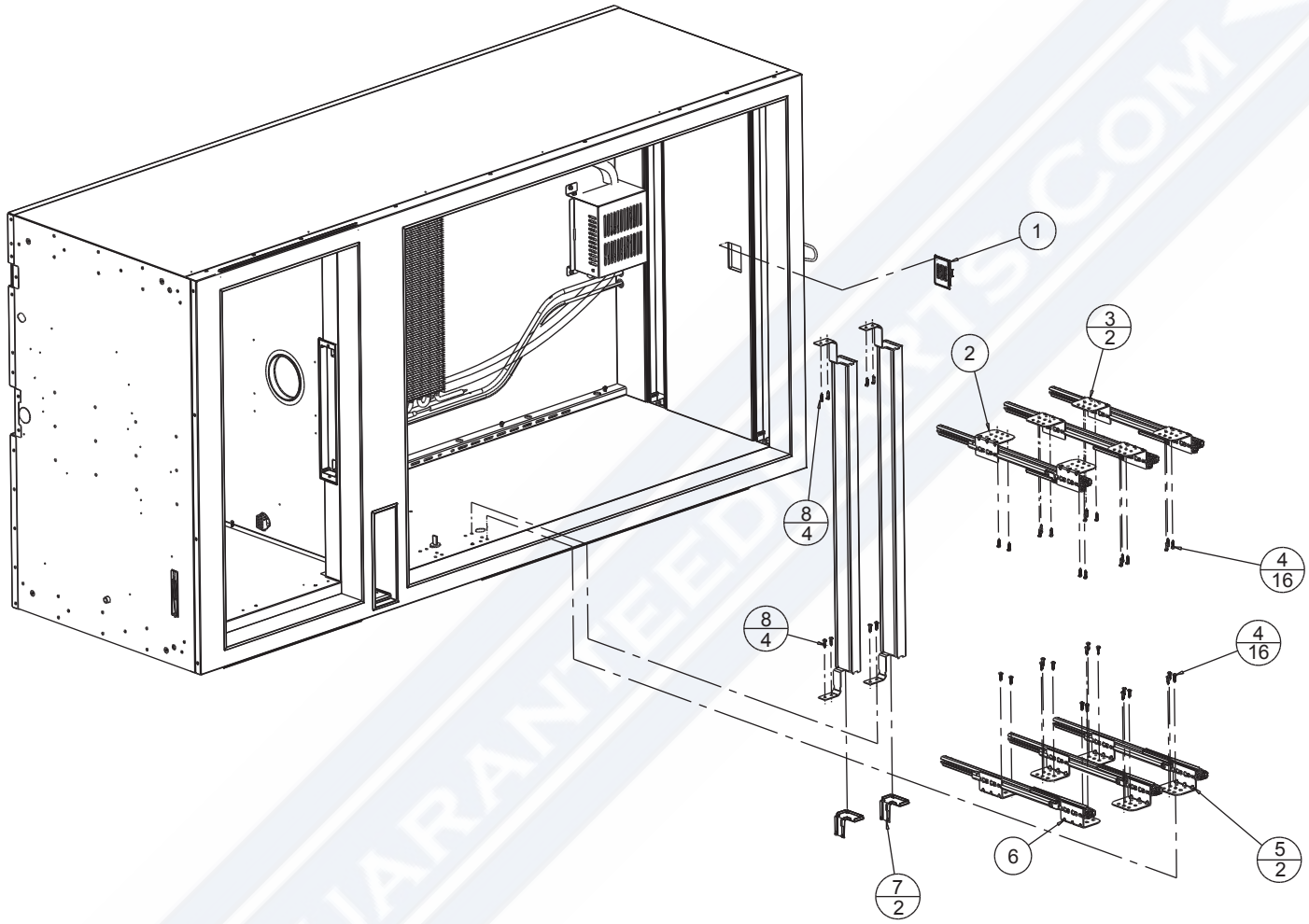

Refrigerator Door Slides

Reference Number	Part Number	Part Name	Quantity
1	799366	COVER-THERMISTOR	1
2	799384	SLIDE-LOWER RC DRAWER (LH)	1
3	799386	SLIDE-MID/UP RC DRAWER (LH)	2
4	300044	SCREW-8-18 x 5/8 SM WAX	16
5	799387	SLIDE-MID/UP RC DRAWER (RH)	2
6	799385	SLIDE-LOWER RC DRAWER (RH)	1
7	799481	ENDCAP-CRISPER LED	2
8	300044	SCREW-8-18 x 5/8 SM WAX	8

GUARANTEEDPARTS.COM

Refrigerator Lights / Freezer Lights

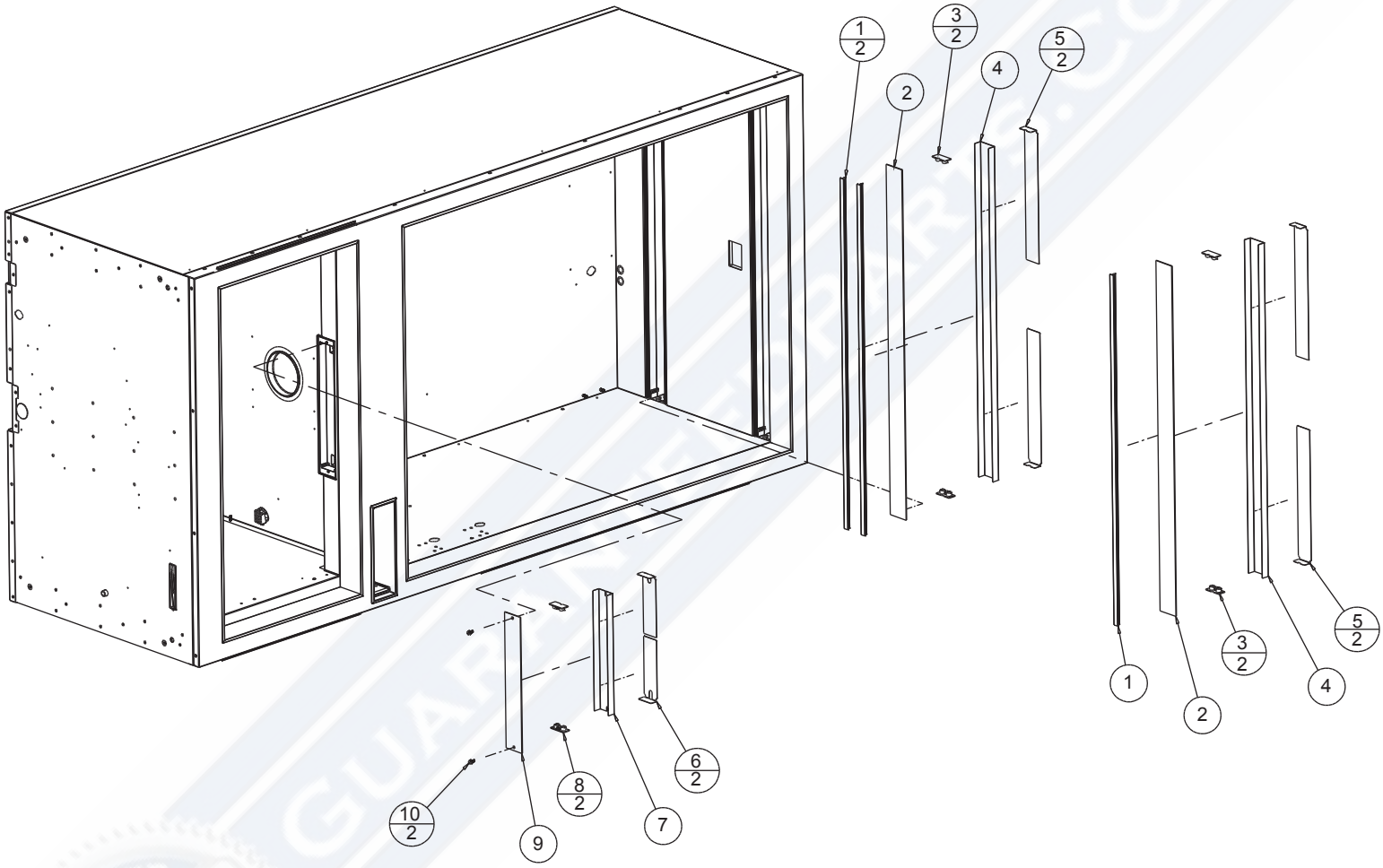

Refrigerator Lights / Freezer Lights

Reference Number	Part Number	Part Name	Quantity
1	799326	SPLINE-LED LIGHT RETAINER	3
2	750555	LIGHT LENSE-REF CAB	2
3	799348	LED LIGHT ENGINE - DOUBLE	4
4	799575	LIGHT CHANNEL-REF CAB	2
5	250262	HEAT SINK-REF LED	4
6	250264	HEAT SINK-FZ LED	2
7	799576	LIGHT CHANNEL-FZ CAB	1
8	750559	LED LIGHT ENGINE - DOUBLE	2
9	750556	LIGHT LENSE-FZ CAB	1
10	300025	SCREW-8-18 x 1/2 SHEETMETAL	2

GUARANTEEDPARTS.COM
CUSTOMER SATISFACTION GUARANTEED

LED Assembly Crisper Drawer

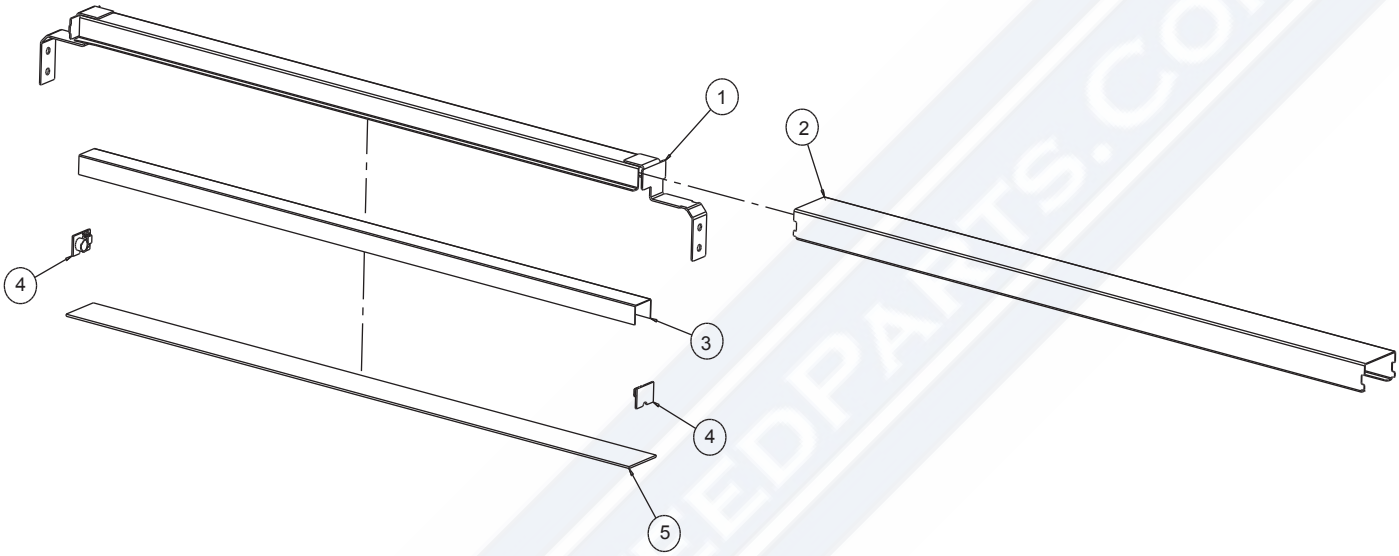

GUARANTEEDPARTS.COM

LED Assembly Crisper Drawer

Reference Number	Part Number	Part Name	Quantity
1	550000	WELDMENT - LED CRISPER LIGHT	1
2	250265	COVER-LED CRISPER	1
3	799577	LIGHT CHANNEL-REF CRISPER	1
4	750558	LED LIGHT ENGINE - SINGLE	2
5	750557	LIGHT LENSE-REF CRISPER	1
N/S	799452	HARNESS-LED CRISPER LIGHT	1

GUARANTEEDPARTS.COM

Refrigerator Rear Covers / Shelves

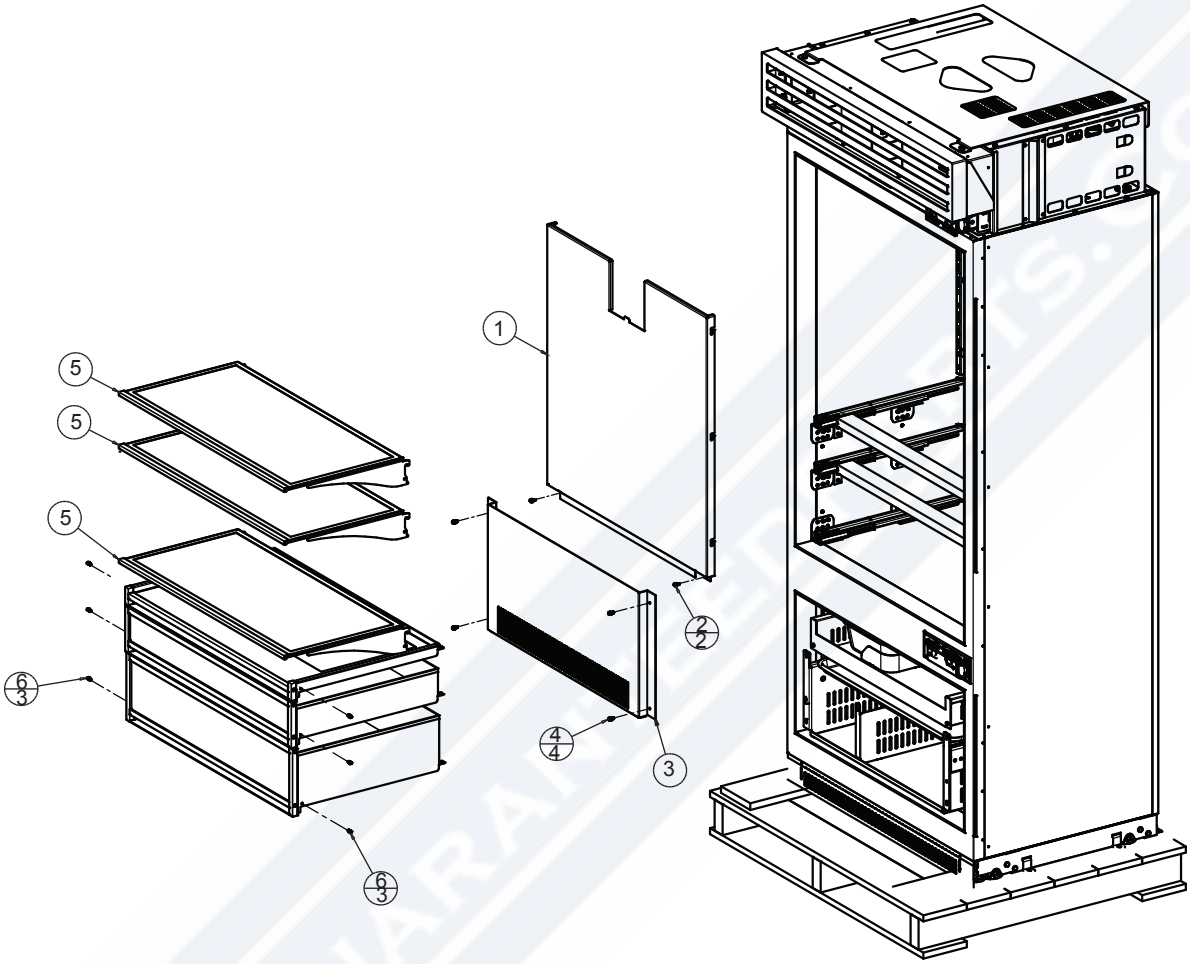

Refrigerator Rear Covers / Shelves

Reference Number	Part Number	Part Name	Quantity
1	250044	COVER-REF EVAP UPPER	1
2	300025	SCREW-8-18 x 1/2 SHEETMETAL	2
3	250213	COVER-REF EVAP LOWER	1
4	300025	SCREW-8-18 x 1/2 SHEETMETAL	4
5	799549	NANO SHELF ASSEMBLY	3
6	300038	SCREW-8-18 x.500 SM WAX	6

GUARANTEEDPARTS.COM
CUSTOMER SATISFACTION GUARANTEED

Doors

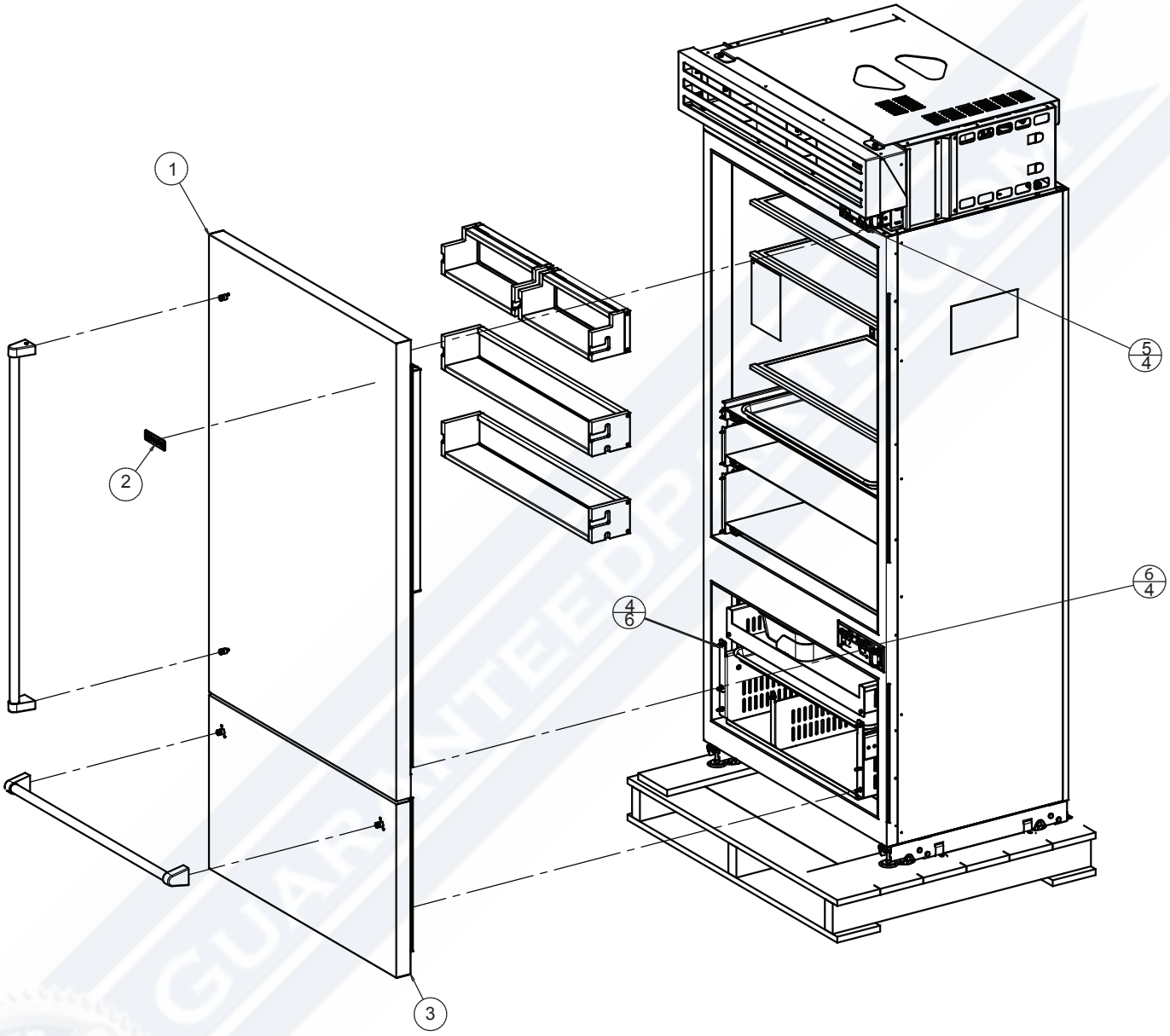

Doors

Reference Number	Part Number	Part Name	Quantity
1	950117	REF DOOR ASSY-RH	1
2	742409	BS-BADGE- MEDIUM W ADH	1
3	950121	FZ DOOR ASSY	1
4	300027	SCREW-10-32 WASHER FLANGE	6
5	300027	SCREW-10-32 WASHER FLANGE	4
6	300027	SCREW-10-32 WASHER FLANGE	4

GUARANTEEDPARTS.COM
CUSTOMER SATISFACTION GUARANTEED

Refrigerator Door Handle / Freezer Door Handle

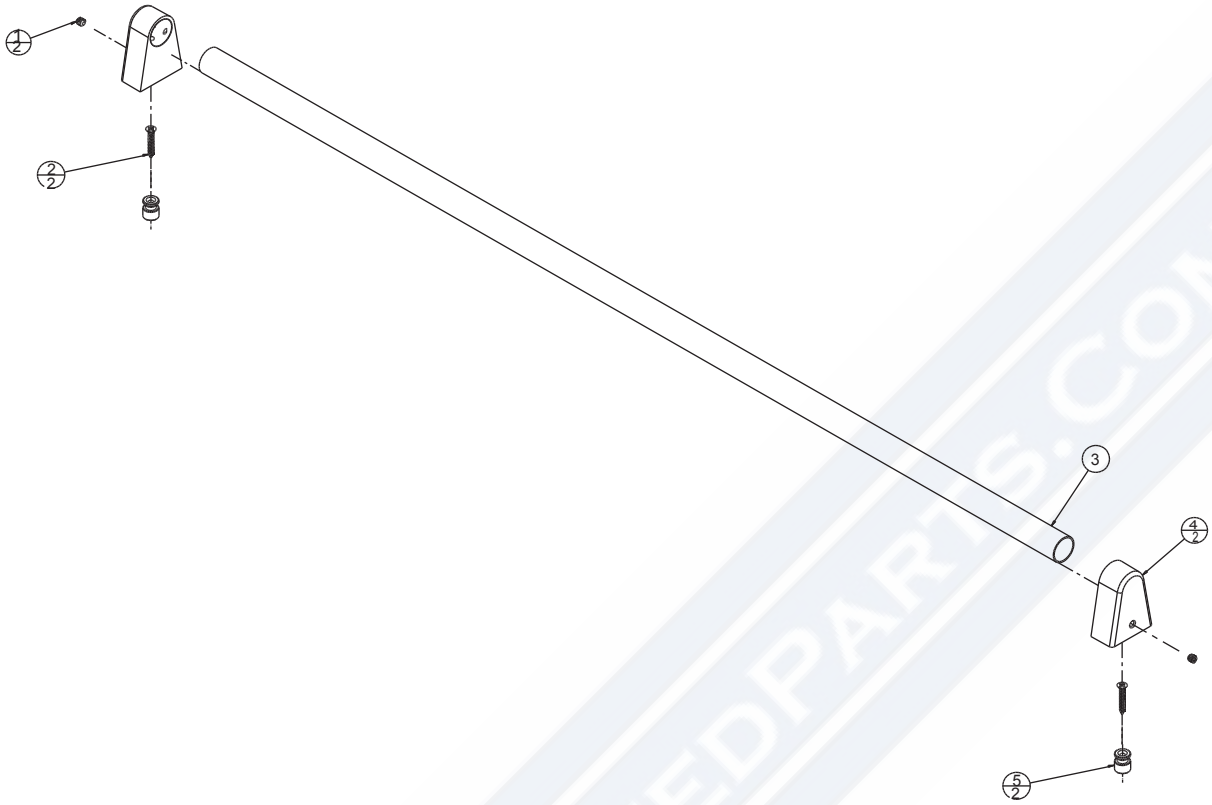

Refrigerator Handle

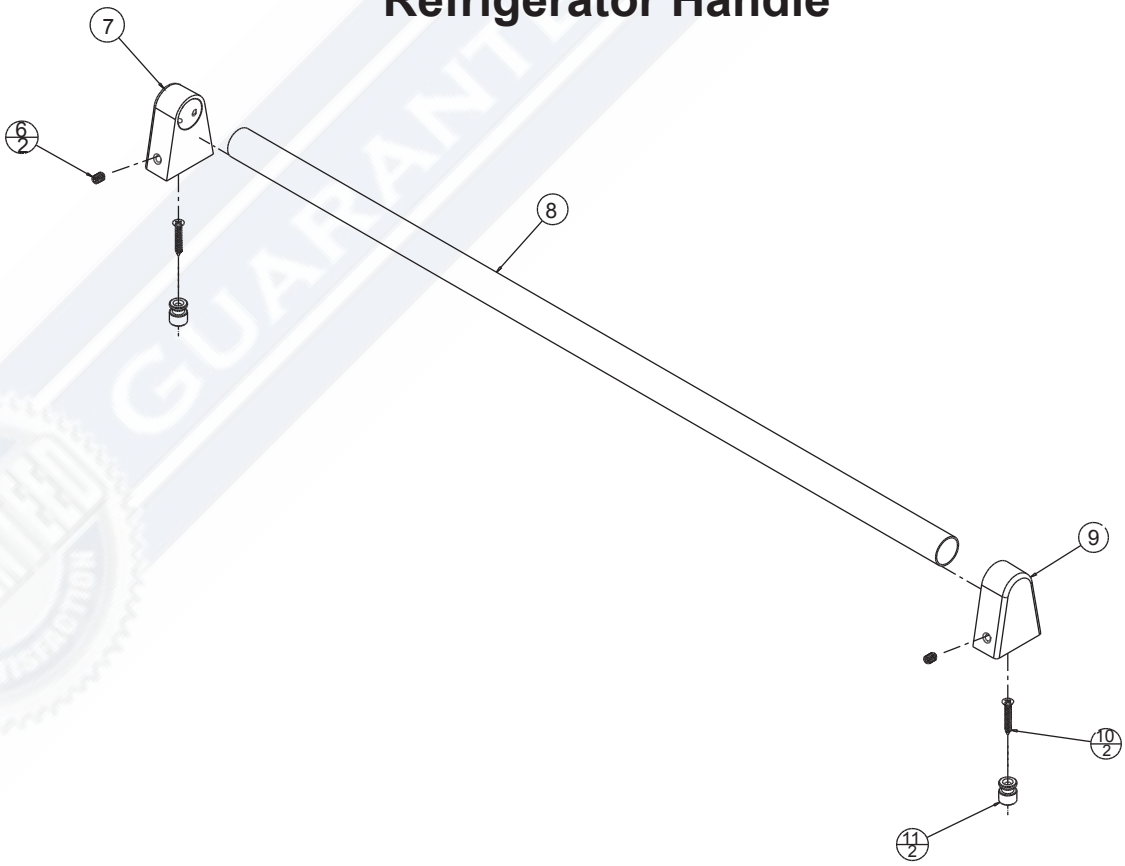

Freezer Handle

Refrigerator Door Handle / Freezer Door Handle

Reference Number	Part Number	Part Name	Quantity
1	799443	Set Screw 1/4-28x1/4 HexCP18-8	2
2	300034	SCREW-10-16 x 1.25" SM	2
3	799400	TUBE-REF HANDLE	1
4	799440	ENDCAP-HANDLE LOWER REF	2
5	799394	MOUNT-HANDLE	2
6	799444	Set Screw 1/4-28x3/8 HexCP18-8	2
7	799441	ENDCAP-HANDLE LEFT FZ	1
8	799401	TUBE-FZ HANDLE	1
9	799442	ENDCAP-HANDLE RIGHT FZ	1
10	300034	SCREW-10-16 x 1.25" SM	2
11	799394	MOUNT-HANDLE	2

GUARANTEEDPARTS.COM

Refrigerator Door Assembly

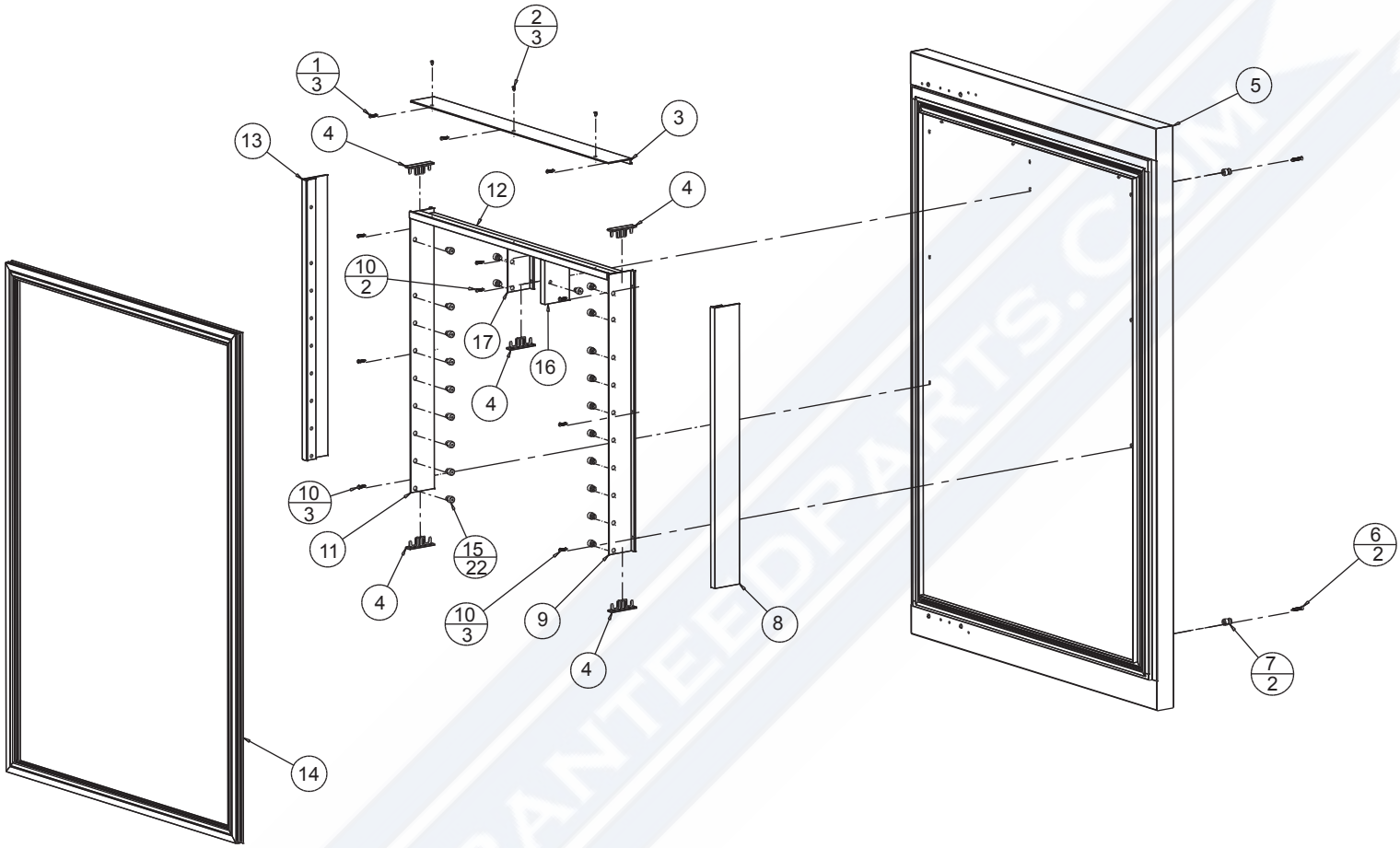

GUARANTEEDPARTS.COM
CUSTOMER SATISFACTION GUARANTEED

Refrigerator Door Assembly (RH)

Reference Number	Part Number	Part Name	Quantity
1	300037	SCREW-8-18 x .75 SM WAX	3
2	300040	SCREW-8-18 x .375 SM	3
3	799379	SUPPORT-HORIZONTAL WALL	1
4	799626	PLUG-WALL SUPPORT	4
5	950118	REF DOOR FOAM ASSY-RH	1
6	300034	SCREW-10-16 x 1.25" SM	2
7	799394	MOUNT-HANDLE	2
8	799321	COVER-WALL SUPPORT (RH)	1
9	799320	SUPPORT-WALL (RH)	1
10	300037	SCREW-8-18 x .75 SM WAX	3
11	799389	SUPPORT-WALL (LH)	1
12	799380	COVER-HORIZONTAL WALL	1
13	799391	COVER-WALL SUPPORT (LH)	1
14	799060	GASKET-REF DOOR ASSY	1
15	300014	SCRW-DR BIN PEG 3/8-16 x .375	1
16	799324	COVER-DAIRY WALL	1
17	799323	SUPPORT-DAIRY WALL	1

GUARANTEEDPARTS.COM

Door Bin Assembly

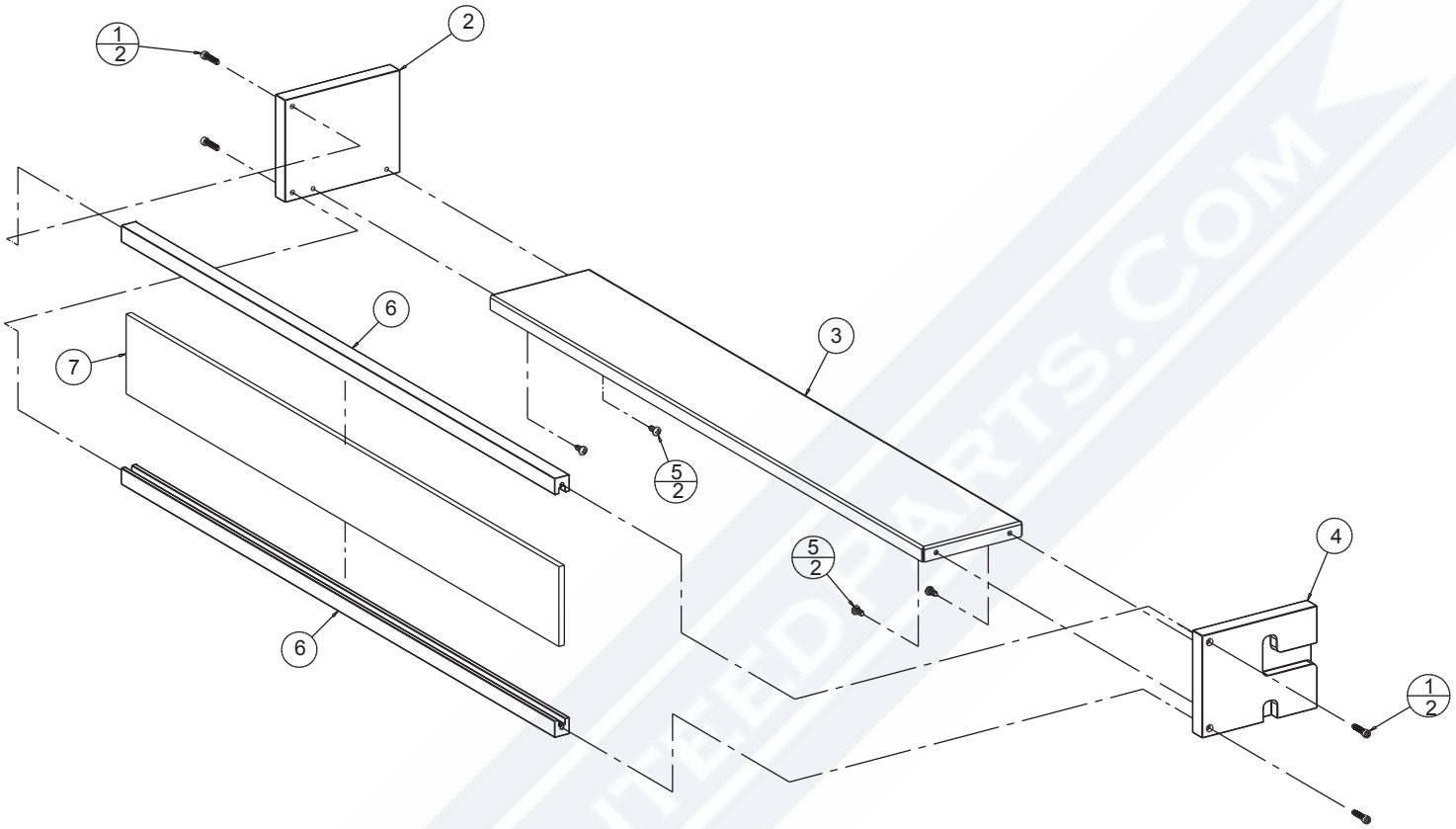

Door Bin Assembly

Reference Number	Part Number	Part Name	Quantity
1	300013	SCREW-SOCKET CAP #8 WAX	4
2	799605	ENDCAP-DOOR BUCKET (LH)	1
3	799545	BOTTOM-DOOR BIN	1
4	799606	ENDCAP-DOOR BUCKET (RH)	1
5	300038	SCREW-8-18 x.500 SM WAX	4
6	799252	RETAINER-DOOR BUCKET	2
7	799254	GLASS-REF DOOR BUCKET	1

GUARANTEEDPARTS.COM
CUSTOMER SATISFACTION GUARANTEED

Dairy Bin Assembly

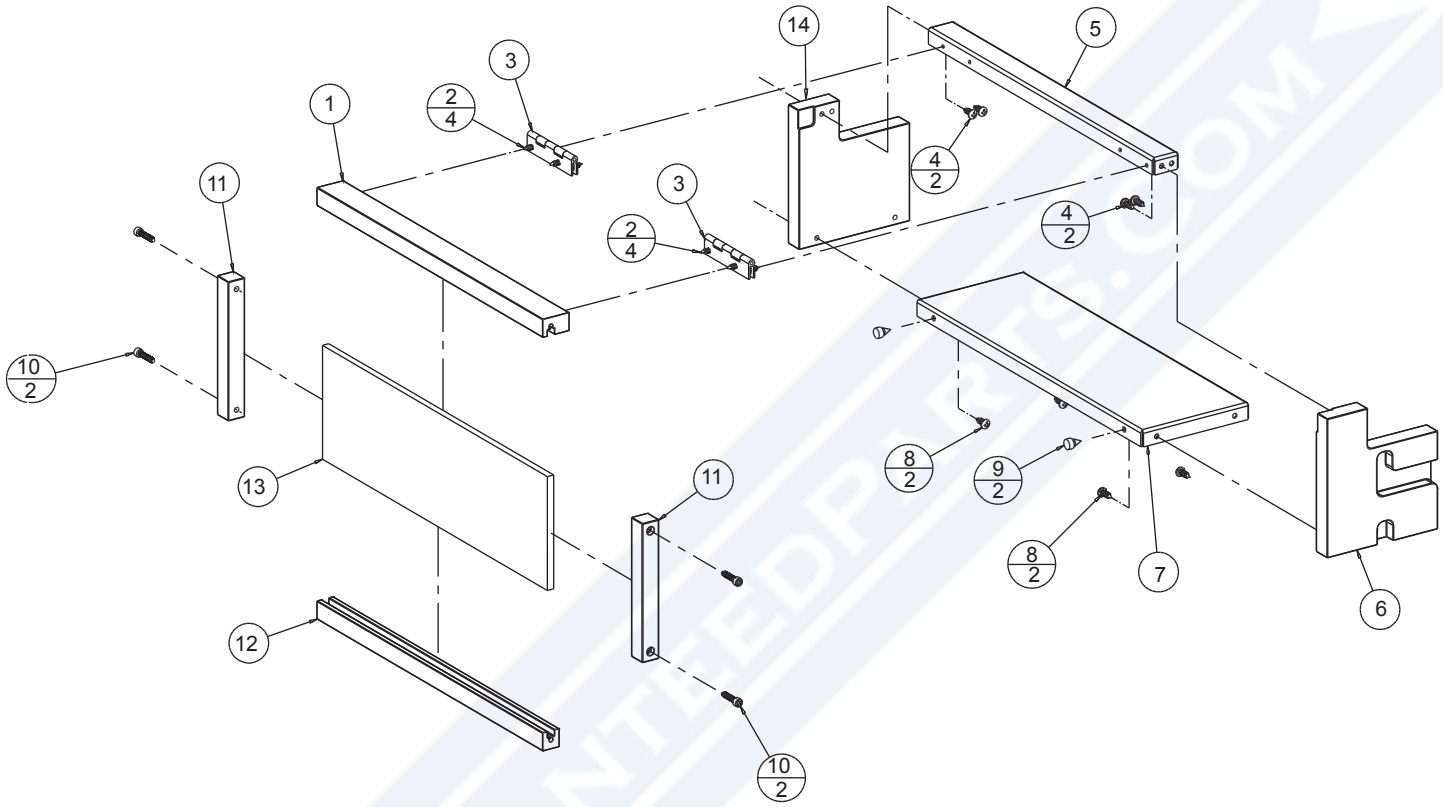

Dairy Bin Assembly

Reference Number	Part Number	Part Name	Quantity
1	799653	RETAINER-DAIRY DOOR GLASS (TOP	1
2	300056	SCREW-7-19 x .375 SM WAX	4
3	799651	HINGE-DAIRY DOOR	2
4	300038	SCREW-8-18 x.500 SM WAX	2
5	799652	TOP-DAIRY BIN	1
6	799608	ENDCAP-DAIRY MODULE (RH)	1
7	799544	BOTTOM-DAIRY BIN	1
8	300038	SCREW-8-18 x.500 SM WAX	2
9	300026	BUMPER-DAIRY DOOR	2
10	300013	SCREW-SOCKET CAP #8 WAX	2
11	799297	ENDCAP-DAIRY DOOR	2
12	799299	RETAINER-DAIRY DOOR BOTTOM	1
13	799305	GLASS-DAIRY DOOR	1
14	799607	ENDCAP-DAIRY MODULE (LH)	1

GUARANTEEDPARTS.COM

Cookie Drawer Assembly

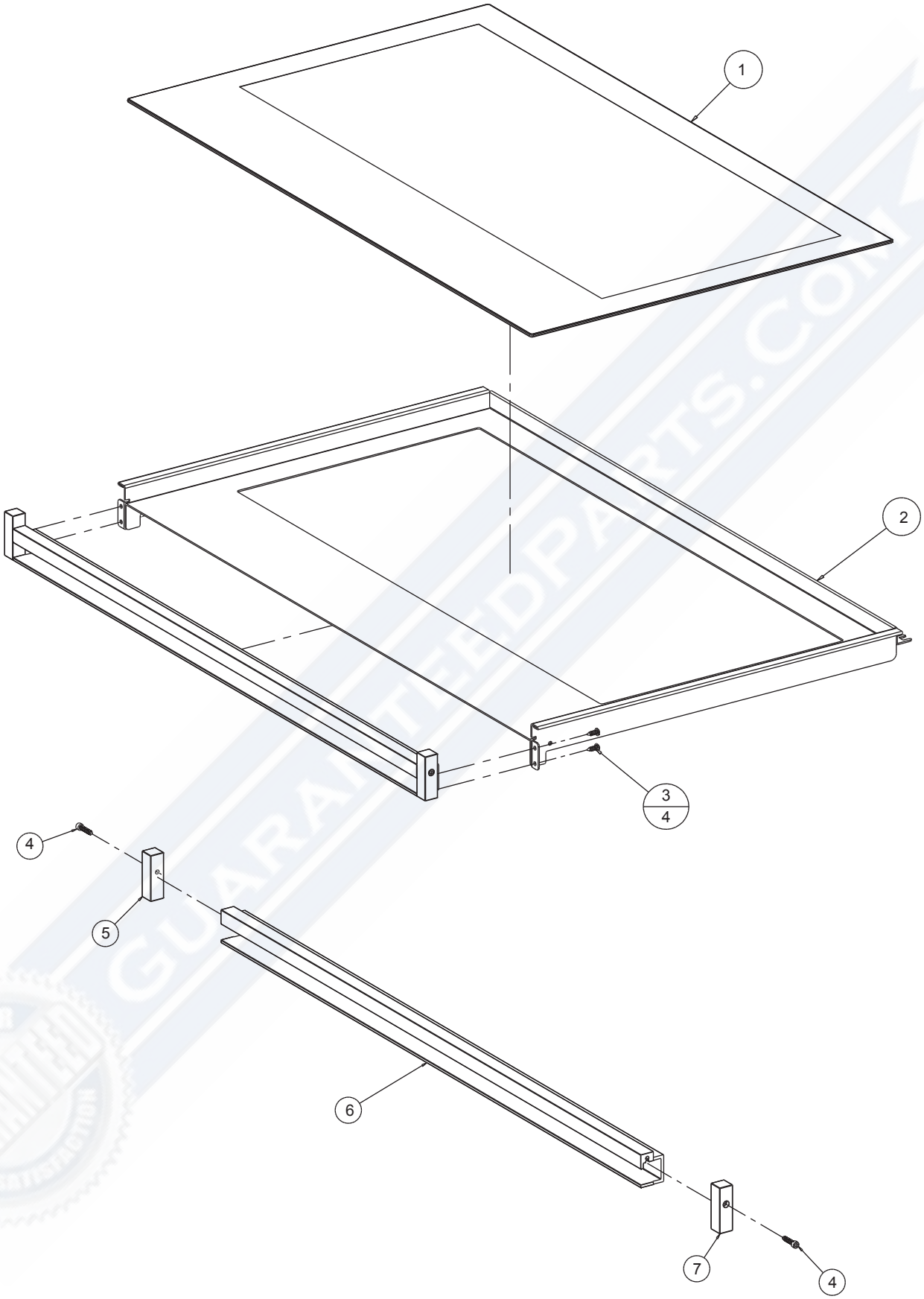

Cookie Drawer Assembly

Reference Number	Part Number	Part Name	Quantity
1	799317	GLASS-COOKIE DRAWER	1
2	799534	DRAWER-RC UP WELDMENT	1
3	300038	SCREW-8-18 x.500 SM WAX	4
4	300013	SCREW-SOCKET CAP #8 WAX	2
5	799293	ENDCAP-COOKIE SHEET (LH)	1
6	799378	HANDLE-COOKIE DRAWER	1
7	799292	ENDCAP-COOKIE SHEET (RH)	1

GUARANTEEDPARTS.COM

Snack Drawer Assembly

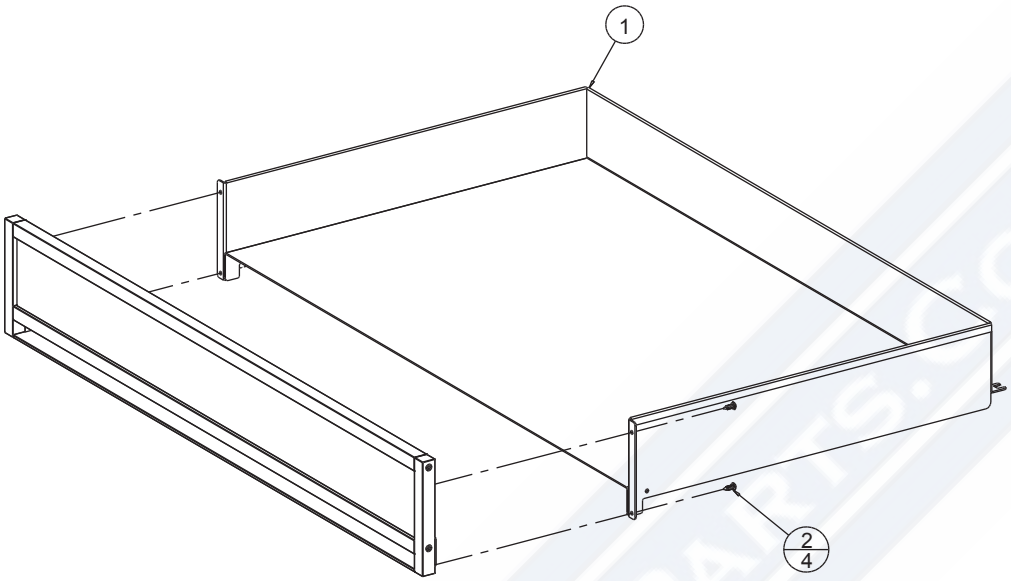

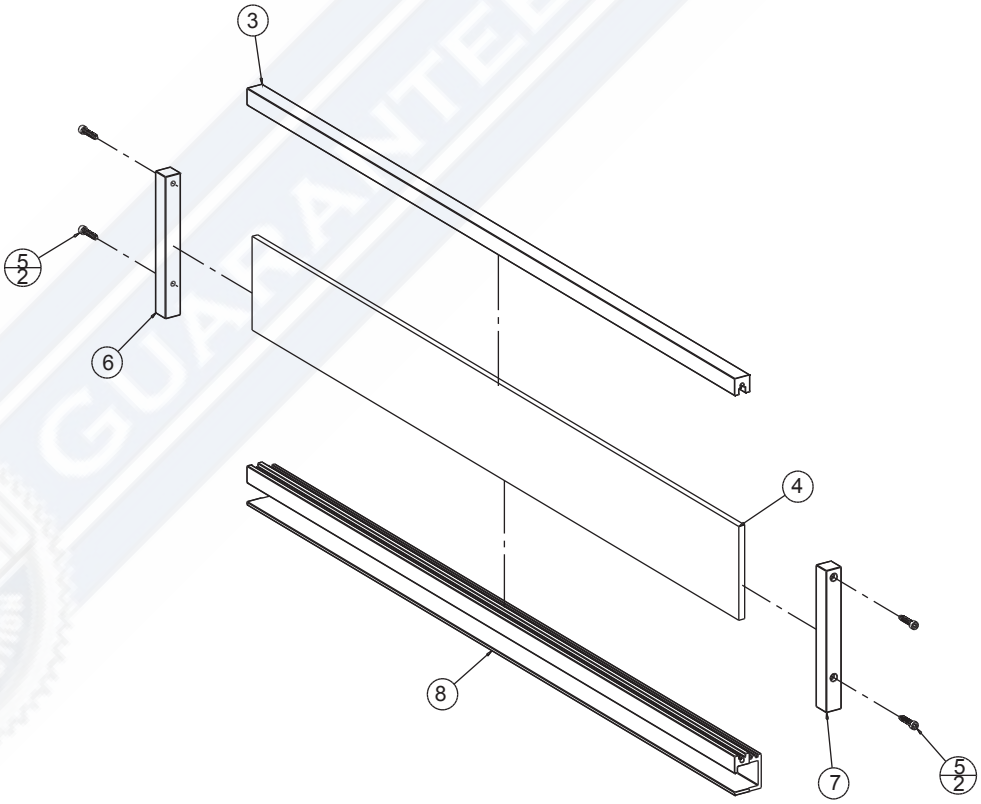

Snack Drawer Assembly

Reference Number	Part Number	Part Name	Quantity
1	799530	DRAWER-RC MID WELDMENT	1
2	300038	SCREW-8-18 x.500 SM WAX	4
3	799287	RETAINER-DRAWER TOP	1
4	799295	GLASS-SNACK PAN FRONT	1
5	300013	SCREW-SOCKET CAP #8 WAX	4
6	799291	ENDCAP-SNACK PAN (LH)	1
7	799290	ENDCAP-SNACK PAN (RH)	1
8	799286	HANDLE-DRAWER	1

GUARANTEEDPARTS.COM

Crisper Drawer Assembly

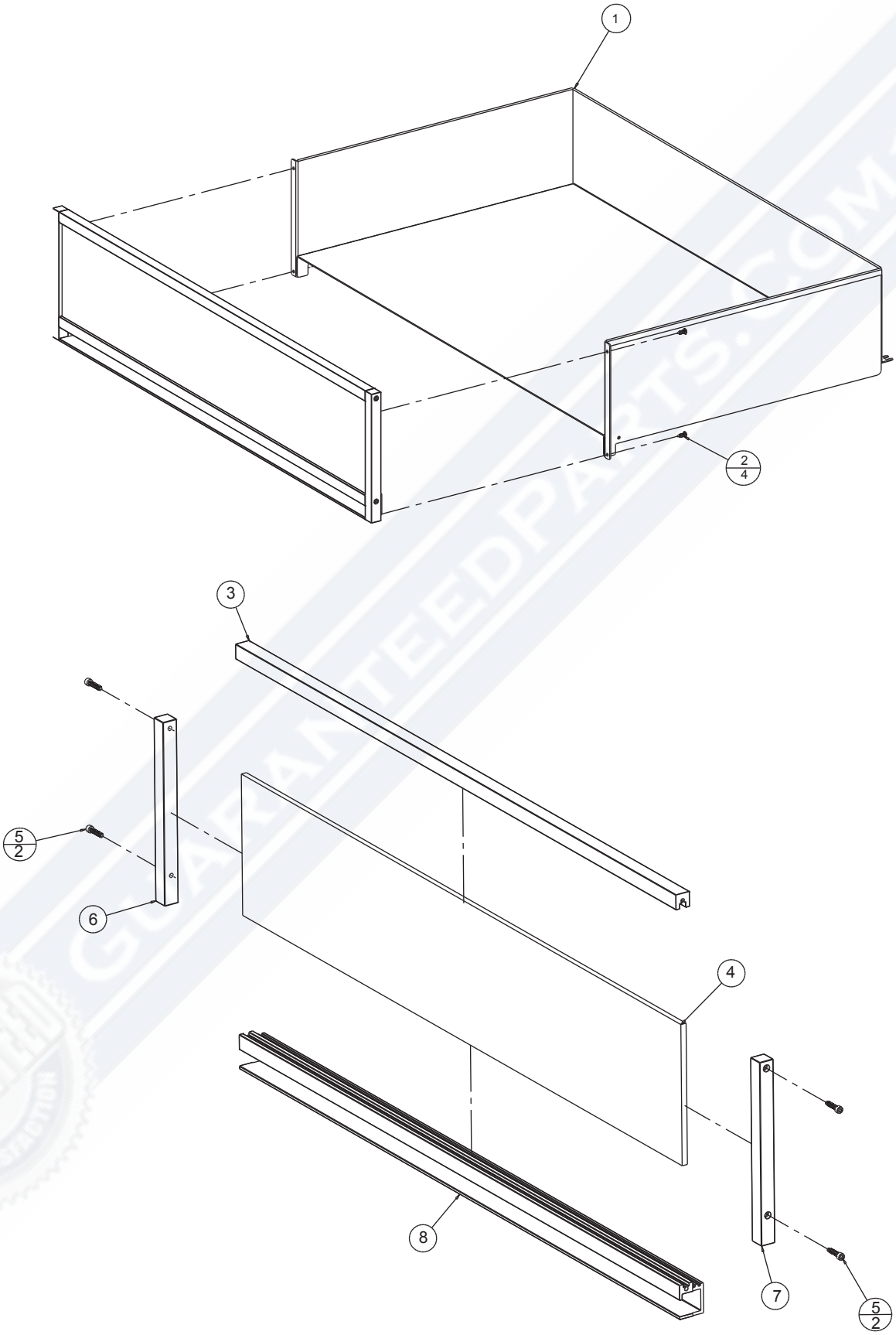

Crisper Drawer Assembly

Reference Number	Part Number	Part Name	Quantity
1	799526	DRAWER-REF LOW WELDMENT	1
2	300038	SCREW-8-18 x.500 SM WAX	4
3	799287	RETAINER-DRAWER TOP	1
4	799294	GLASS-CRISPER PAN FRONT	1
5	300013	SCREW-SOCKET CAP #8 WAX	4
6	799289	ENDCAP-CRISPER (LH)	1
7	799288	ENDCAP-CRISPER (RH)	1
8	799286	HANDLE-DRAWER	1

GUARANTEEDPARTS.COM
CUSTOMER SATISFACTION GUARANTEED

Freezer Evaporator / Defrost Heater

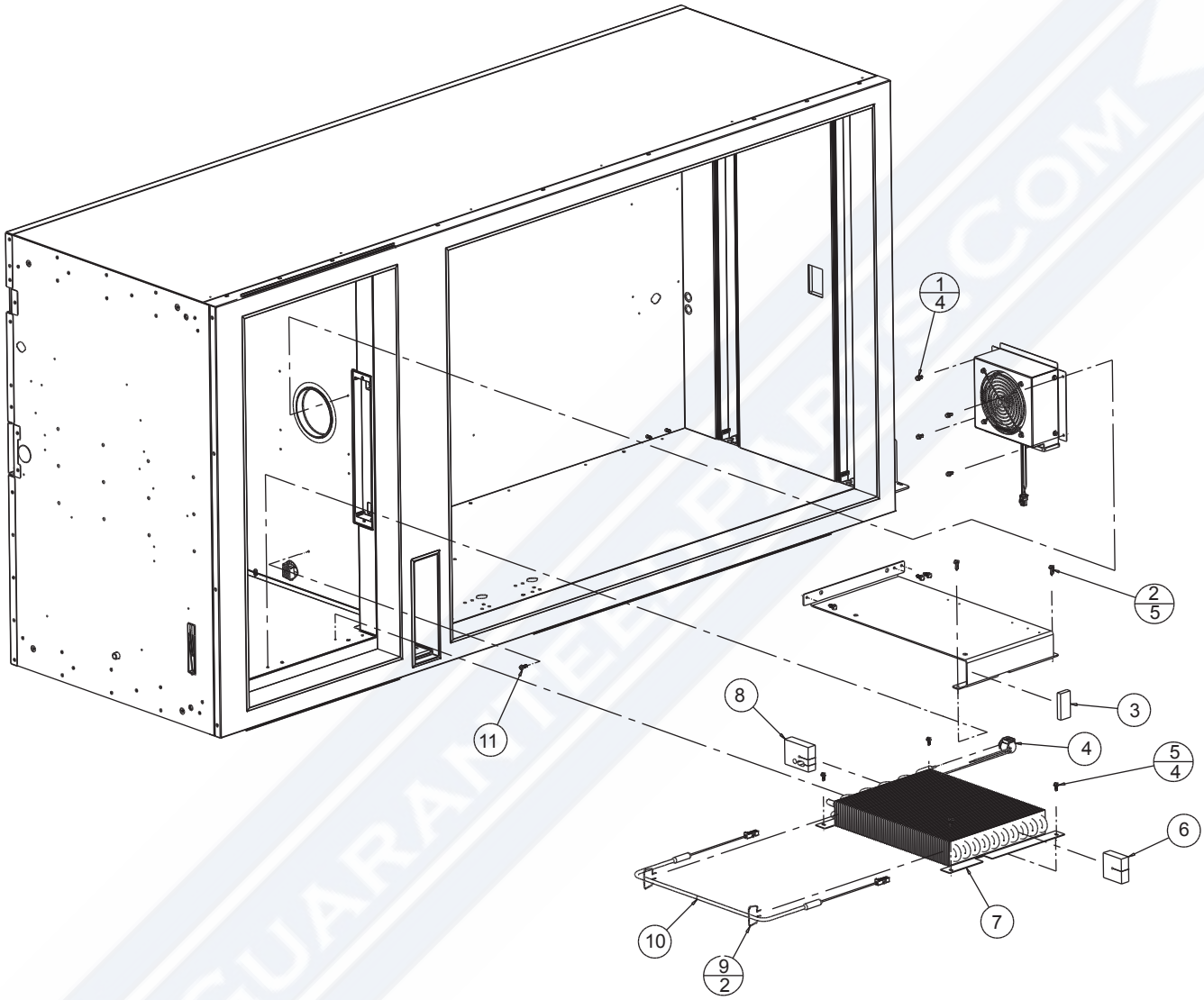

Freezer Evaporator / Defrost Heater

Reference Number	Part Number	Part Name	Quantity
1	300025	SCREW-8-18 x 1/2 SHEETMETAL	4
2	300061	SCREW-10-16 x .625" HEX WASHER	5
3	799552	GASKET-FZ EVAP	1
4	799701	HARNESS-FZ EVAP/FAN	1
5	300025	SCREW-8-18 x 1/2 SHEETMETAL	4
6	799501	FOAM BLOCK-FZ EVAP FRONT	2
7	799466	EVAPORATOR-FZ	1
8	799502	AIR DAM-FZ EVAP REAR	1
9	799584	CLIP-DEFROST HEATER	2
10	799635	DEFROST HEATER	1
11	300623	8-32x3/8" ZINC GROUNDSCREW	1

GUARANTEEDPARTS.COM
CUSTOMER SATISFACTION GUARANTEED

Freezer Evaporator Fan Assembly

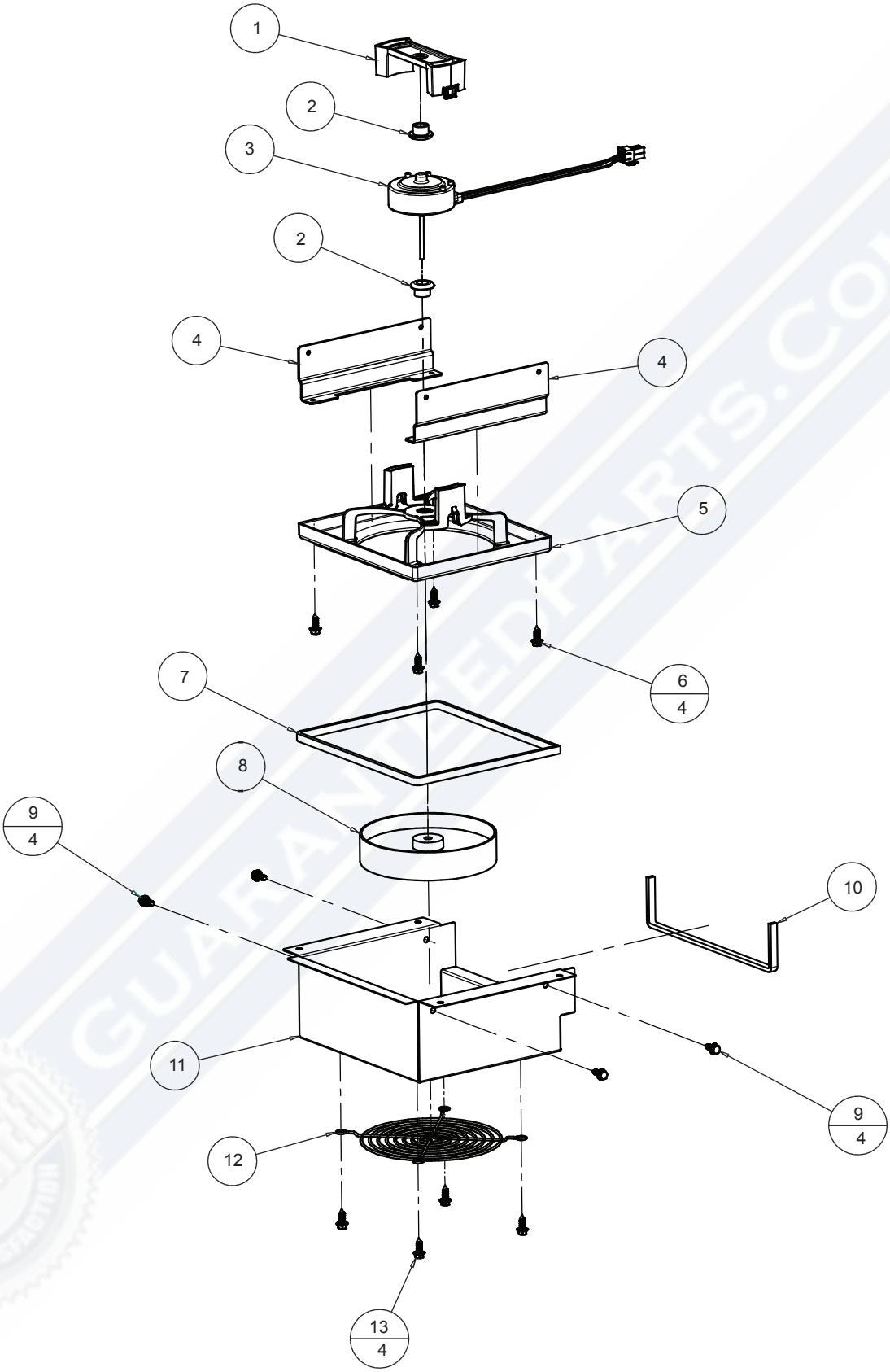

GUARANTEEDPARTS.COM

Freezer Evaporator Fan Assembly

Reference Number	Part Number	Part Name	Quantity
1	799479	CLIP-EVAP FAN	1
2	799634	GROMMET-EVAP MOTOR	2
3	799426	MOTOR-EVAP FAN	1
4	250242	BRACKET-FZ EVAP FAN	1
5	799478	SHROUD-EVAP FAN	1
6	300025	SCREW-8-18 x 1/2 SHEETMETAL	4
7	799493	GASKET-REF EVAP FAN	1
8	799572	FAN BLADE-EVAPORATOR	1
9	300025	SCREW-8-18 x 1/2 SHEETMETAL	4
10	799492	GASKET-REF EVAP FAN	1
11	250240	GRILLE-FZ EVAP	1
12	799617	GRILLE-FC EVAP	1
13	300025	SCREW-8-18 x 1/2 SHEETMETAL	4

GUARANTEEDPARTS.COM

Freezer Drawer Slides / Freezer Side Cover

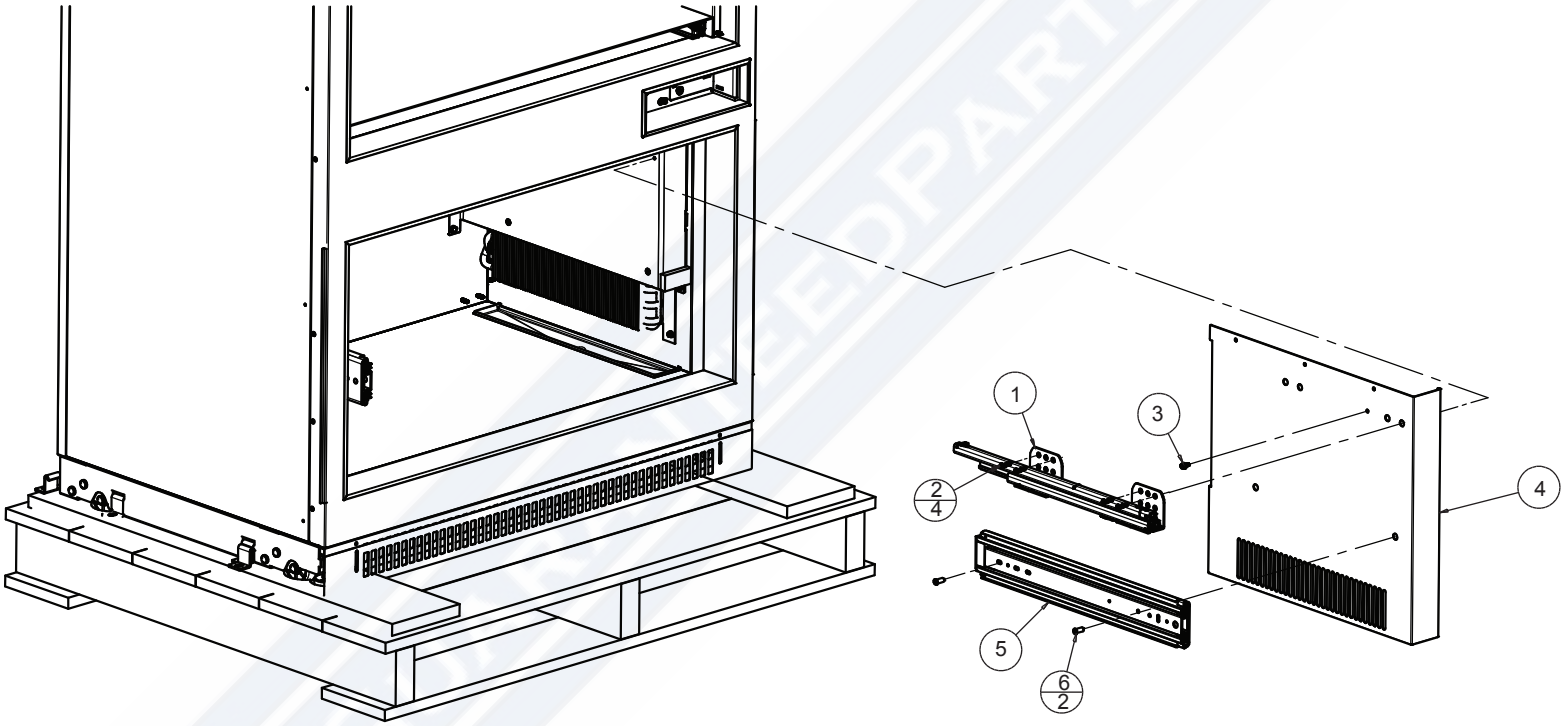

Freezer Drawer Slides / Freezer Side Cover

Reference Number	Part Number	Part Name	Quantity
1	799383	SLIDE-UPPER FC DRAWER (RH)	1
2	300028	SCREW-5/16"-1/2" WASHER FLANGE	4
3	300025	SCREW-8-18 x 1/2 SHEETMETAL	1
4	250040	EVAP COVER-FZ	1
5	799381	SLIDE-BOTTOM FC DRAWER (R\L)	1
6	300011	SCREW-1/4-20 x .625 #10 CS	2

GUARANTEEDPARTS.COM
CUSTOMER SATISFACTION GUARANTEED

Ice Maker / Freezer Drawer Slides

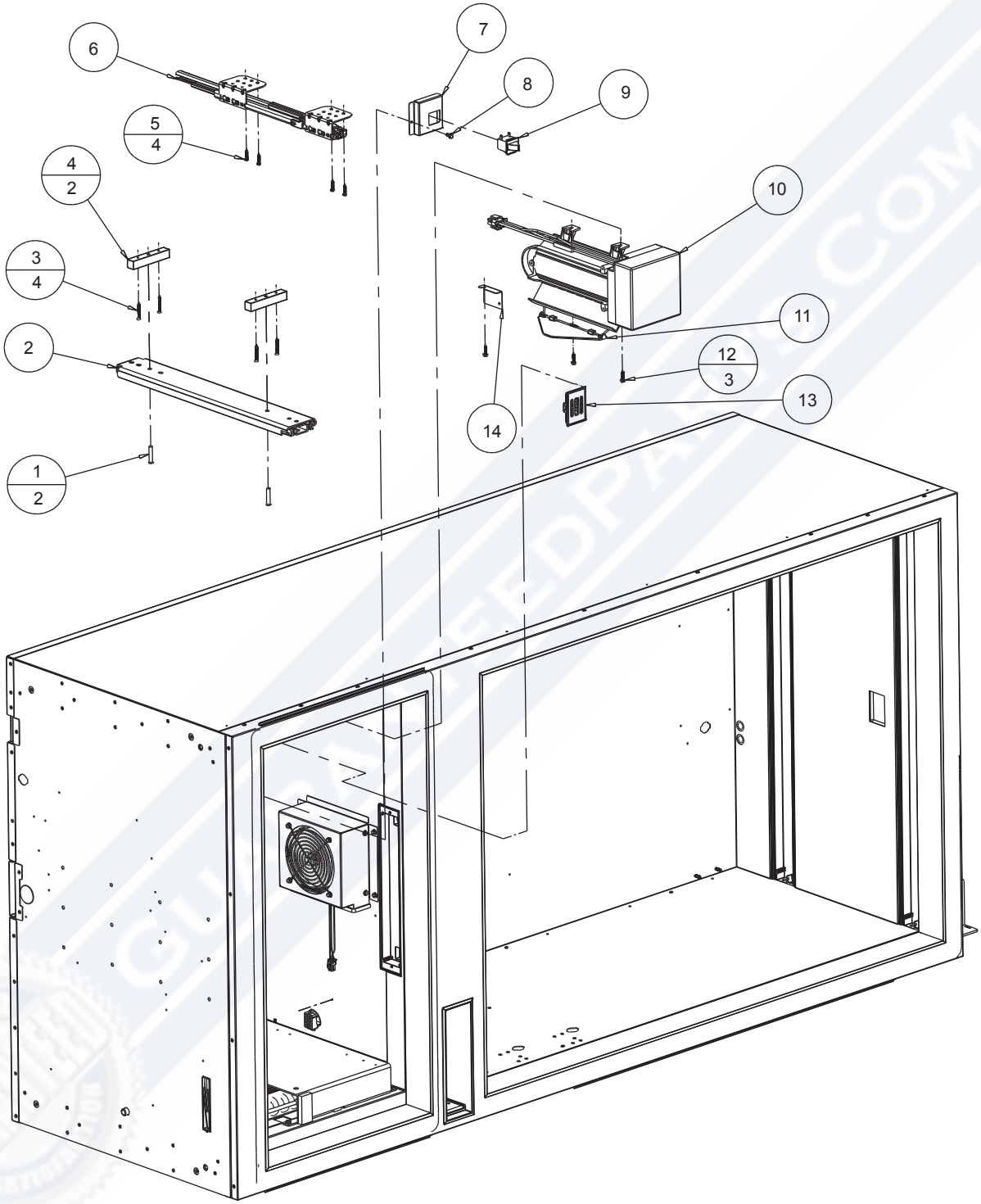

Ice Maker / Freezer Drawer Slides

Reference Number	Part Number	Part Name	Quantity
1	300012	SCREW-1/4-20 x 1.25 #10 CS	2
2	799381	SLIDE-BOTTOM FC DRAWER (R\L)	1
3	300053	SCREW-#8-18 x 1.25 CS SM	4
4	799404	SPACER-FZ DRAWER	2
5	300037	SCREW-8-18 x .75 SM WAX	4
6	799382	SLIDE-UPPER FC DRAWER (LH)	1
7	250286	COVER-FZ LIGHT SWITCH	1
8	300025	SCREW-8-18 x 1/2 SHEETMETAL	1
9	703625	SWITCH-DOOR	1
10	703626	ICEMAKER	1
11	799618	FLAP-ICEMAKER BALE ARM	1
12	300042	SCREW-8-18 x 3/4 SHEETMETAL	3
13	799366	COVER-THERMISTOR	1
14	250311	BRACKET-ICEMAKER	1

GUARANTEEDPARTS.COM

Freezer Slide Support

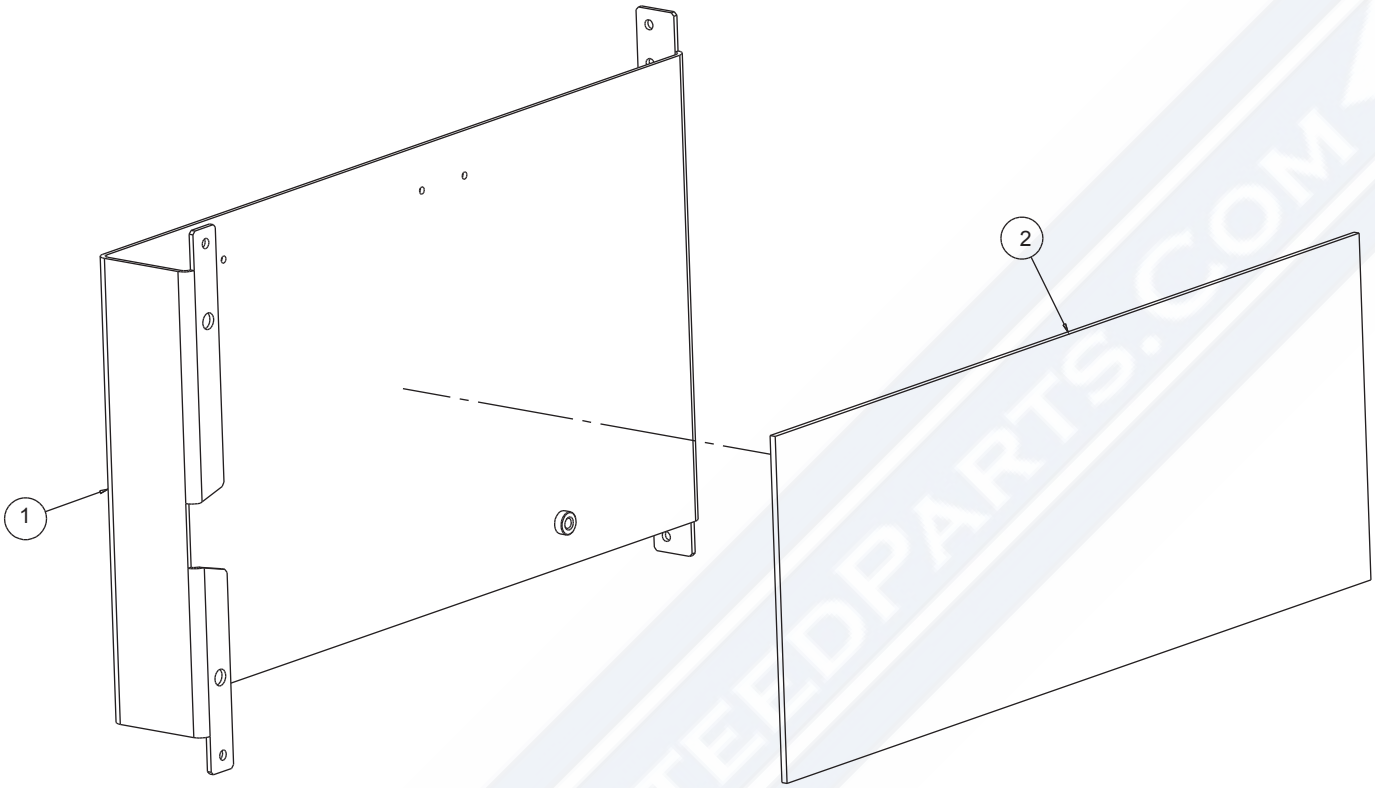

GUARANTEEDPARTS.COM

Freezer Slide Support

Reference Number	Part Number	Part Name	Quantity
1	650073	FZ SLIDE SUPPPORT ASSY-RH	1
2	799551	GASKET-FZ EVAP	1

GUARANTEEDPARTS.COM

Freezer Air Duct

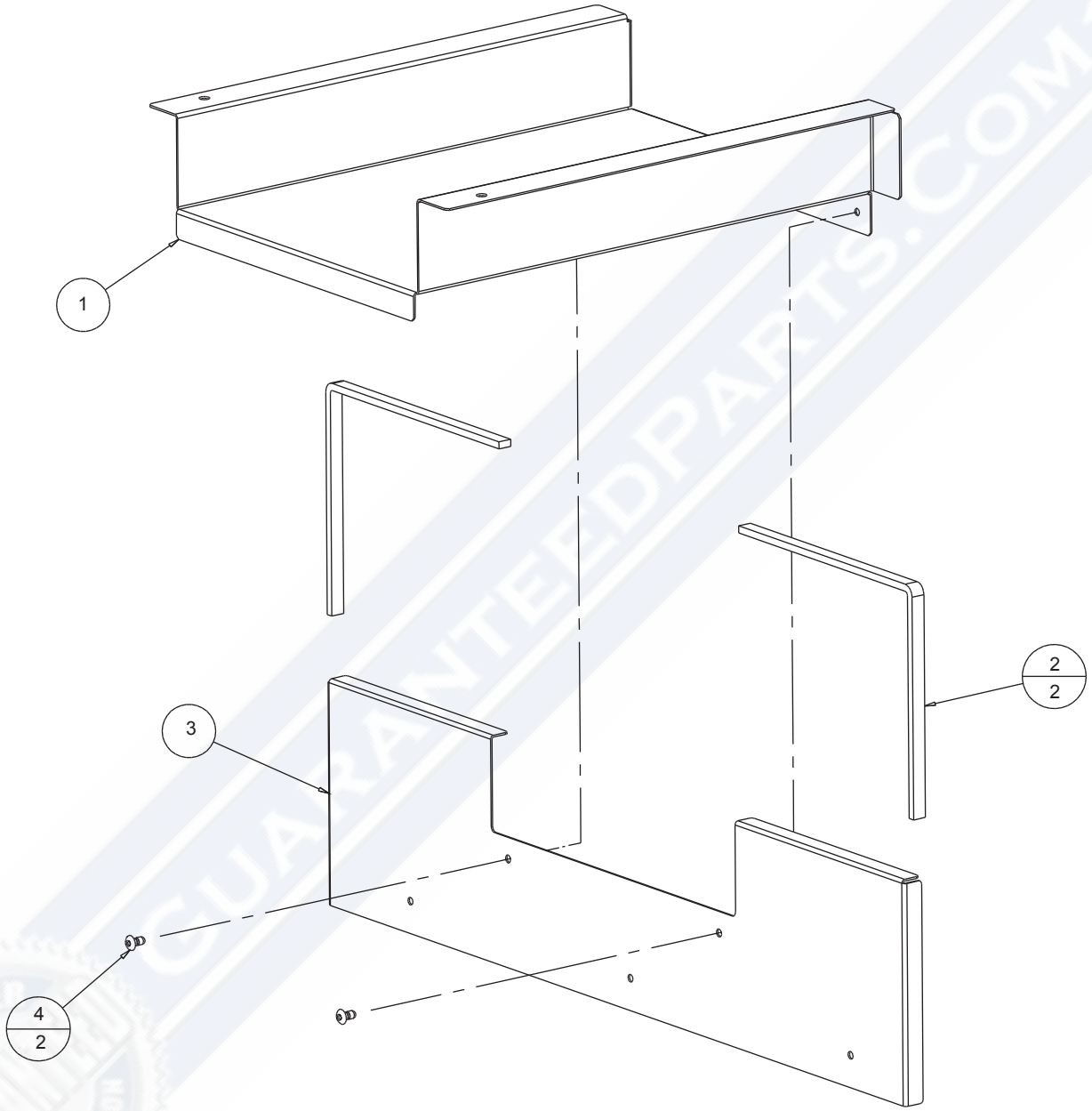

GUARANTEEDPARTS.COM

Freezer Air Duct

Reference Number	Part Number	Part Name	Quantity
1	250220	COVER-FAN FZ	1
2	799553	GASKET-FZ EVAP	2
3	250284	EVAP UPPER COVER-FZ	1
4	300041	RIVET-1/8" STAINLESS .063-.125	2

GUARANTEEDPARTS.COM
CUSTOMER SATISFACTION GUARANTEED

Serpentine Assembly

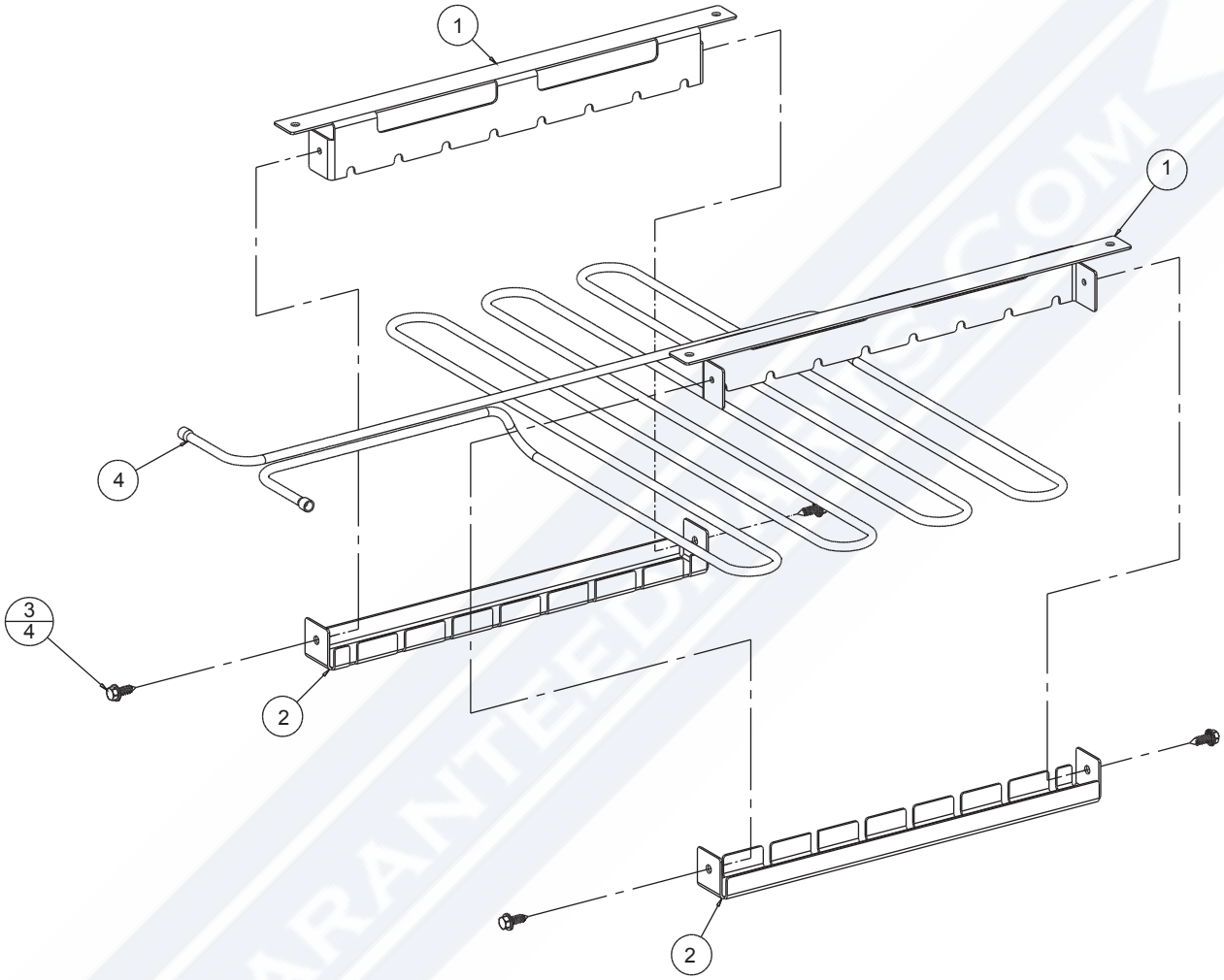

Serpentine Assembly

Reference Number	Part Number	Part Name	Quantity
1	250272	BRACKET-SERPENTINE	2
2	250273	CLAMP-SERPENTINE	2
3	300025	SCREW-8-18 x 1/2 SHEETMETAL	4
4	799506	SERPENTINE-PC LOOP	1

GUARANTEEDPARTS.COM

Drain Pan

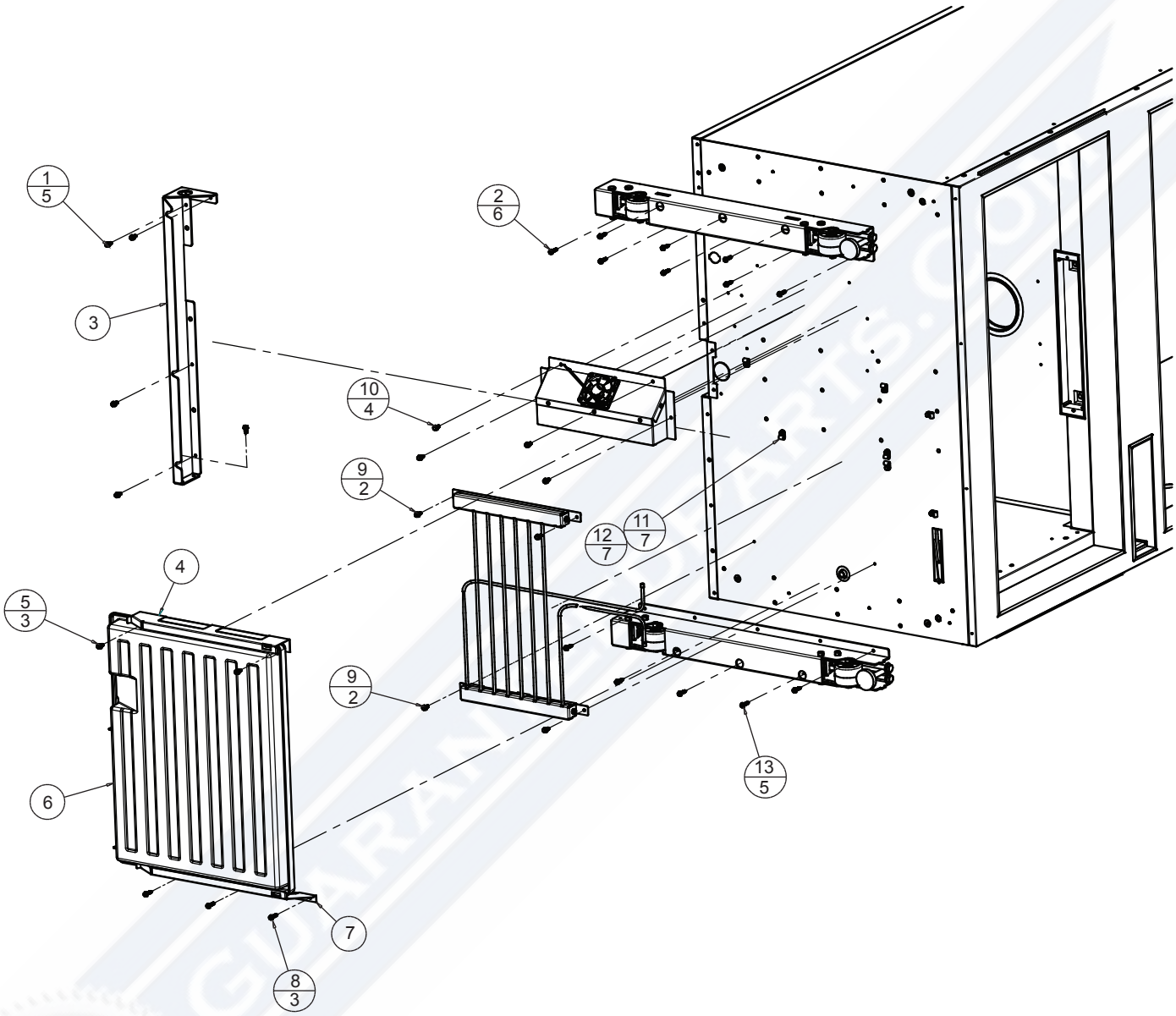

Drain Pan

Reference Number	Part Number	Part Name	Quantity
1	300042	SCREW-8-18 x 3/4 SHEETMETAL	5
2	300042	SCREW-8-18 x 3/4 SHEETMETAL	5
3	799679	BRACE-REAR DRIPTRAY	1
4	250336	SUPPORT-DRAIN PAN REAR LH	1
5	300025	SCREW-8-18 x 1/2 SHEETMETAL	3
6	799355	DRAIN PAN	1
7	250335	SUPPORT-DRAIN PAN REAR RH	1
8	300042	SCREW-8-18 x 3/4 SHEETMETAL	3
9	300025	SCREW-8-18 x 1/2 SHEETMETAL	2
10	300025	SCREW-8-18 x 1/2 SHEETMETAL	4
11	799587	P CLAMP-3/16	7
12	300025	SCREW-8-18 x 1/2 SHEETMETAL	7
13	300042	SCREW-8-18 x 3/4 SHEETMETAL	5

GUARANTEEDPARTS.COM

Freezer Basket / Ice Pan / Toe Grill

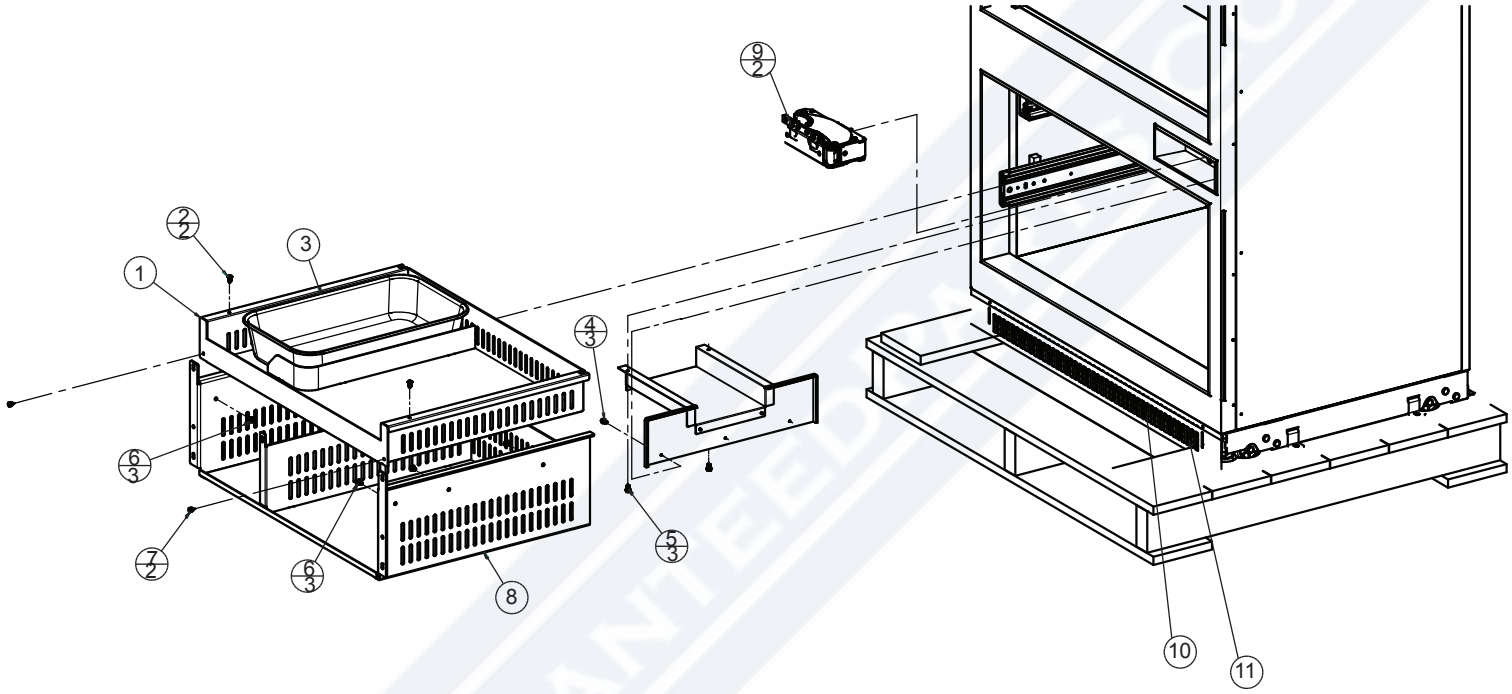

Freezer Basket / Ice Pan / Toe Grill

Reference Number	Part Number	Part Name	Quantity
1	799542	DRAWER-UPPER FZ WELDMENT	1
2	300038	SCREW-8-18 x.500 SM WAX	2
3	799339	BIN-ICE	1
4	300025	SCREW-8-18 x 1/2 SHEETMETAL	3
5	300025	SCREW-8-18 x 1/2 SHEETMETAL	2
6	300039	SCREW-10-24 x .312 MACH	6
7	300026	BUMPER-DAIRY DOOR	2
8	799539	DRAWER-FZ LOW WELDMENT	1
9	300033	SCREW-M6-1.0 x 16mm (8.8)	2
10	250345	GRILLE-TOE (FIXED)	1
11	250346	GRILLE-TOE (ADJUSTABLE)	1

GUARANTEEDPARTS.COM
CUSTOMER SATISFACTION GUARANTEED

Roller Housing Assembly (LH)

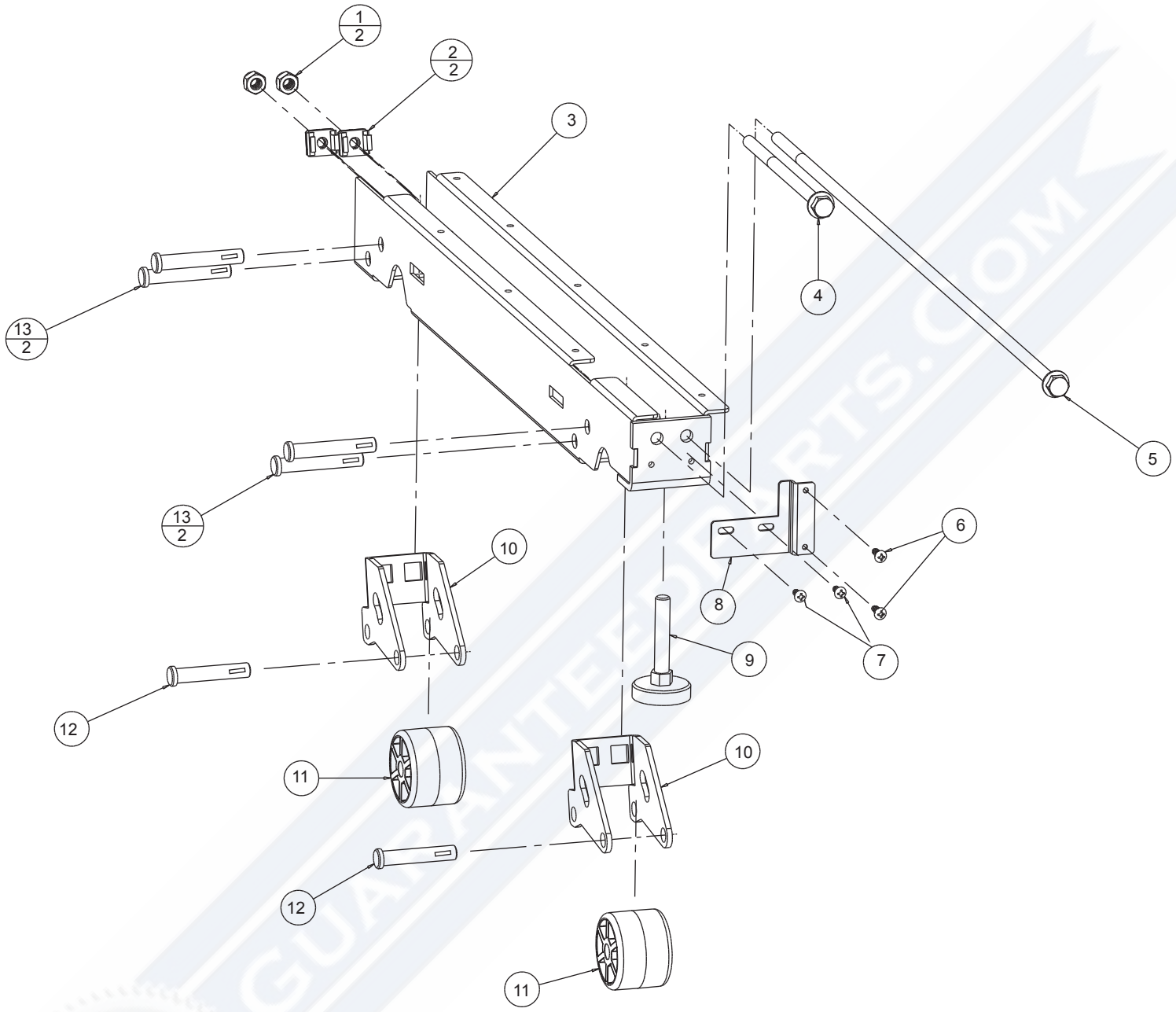

GUARANTEEDPARTS.COM
CUSTOMER SATISFACTION GUARANTEED

Roller Housing Assembly (LH)

Reference Number	Part Number	Part Name	Quantity
1	300017	NUT-5/16 ZINC ACORN	2
2	300024	NUT-5/16 CAGE .127-.162 PANEL	2
3	799564	WELDMENT-ROLLER HOUSING (LH)	1
4	300010	BOLT-5/16 x 5" HEX LEVELING	1
5	300009	BOLT-5/16 x 20" HEX LEVELING	1
6	300048	SCREW-8-18 x 1/2 BLACK SM	2
7	300050	SCREW-8-32 -1/2" TC F	2
8	250274	BRACKET-TOE GRILLE (LH)	1
9	300016	FOOT-LEVELER	1
10	799636	FRAME-ROLLER TILT	1
11	799623	ROLLER-CABINET BASE	2
12	300085	PIN-ROLLER AXLE	2
13	300086	PIN-TILT FRAME	4

GUARANTEEDPARTS.COM
GUARANTEED CUSTOMER SATISFACTION

Roller Housing Assembly (RH)

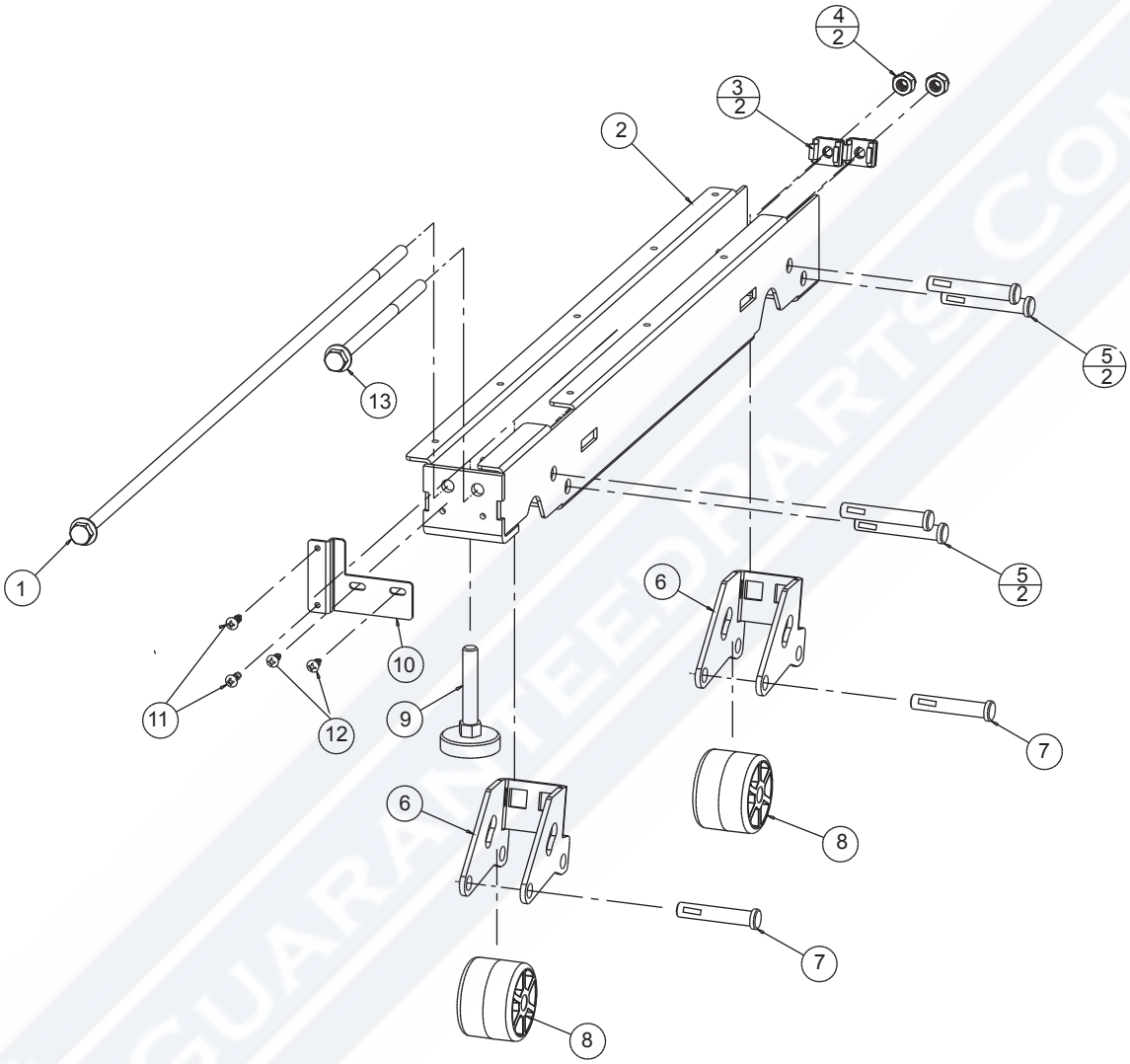

GUARANTEEDPARTS.COM
CUSTOMER SATISFACTION GUARANTEED

Roller Housing Assembly (RH)

Reference Number	Part Number	Part Name	Quantity
1	300009	BOLT-5/16 x 20" HEX LEVELING	1
2	799565	WELDMENT-ROLLER HOUSING (RH)	1
3	300024	NUT-5/16 CAGE .127-.162 PANEL	2
4	300017	NUT-5/16 ZINC ACORN	2
5	300086	PIN-TILT FRAME	2
6	799636	FRAME-ROLLER TILT	1
7	300085	PIN-ROLLER AXLE	1
8	799623	ROLLER-CABINET BASE	1
9	300016	FOOT-LEVELER	1
10	250275	BRACKET-TOE GRILLE (RH)	1
11	300048	SCREW-8-18 x 1/2 BLACK SM	2
12	300050	SCREW-8-32 -1/2" TC F	2
13	300010	BOLT-5/16 x 5" HEX LEVELING	1

GUARANTEEDPARTS.COM
GUARANTEED CUSTOMER SATISFACTION

Drain Pan Fan Assembly

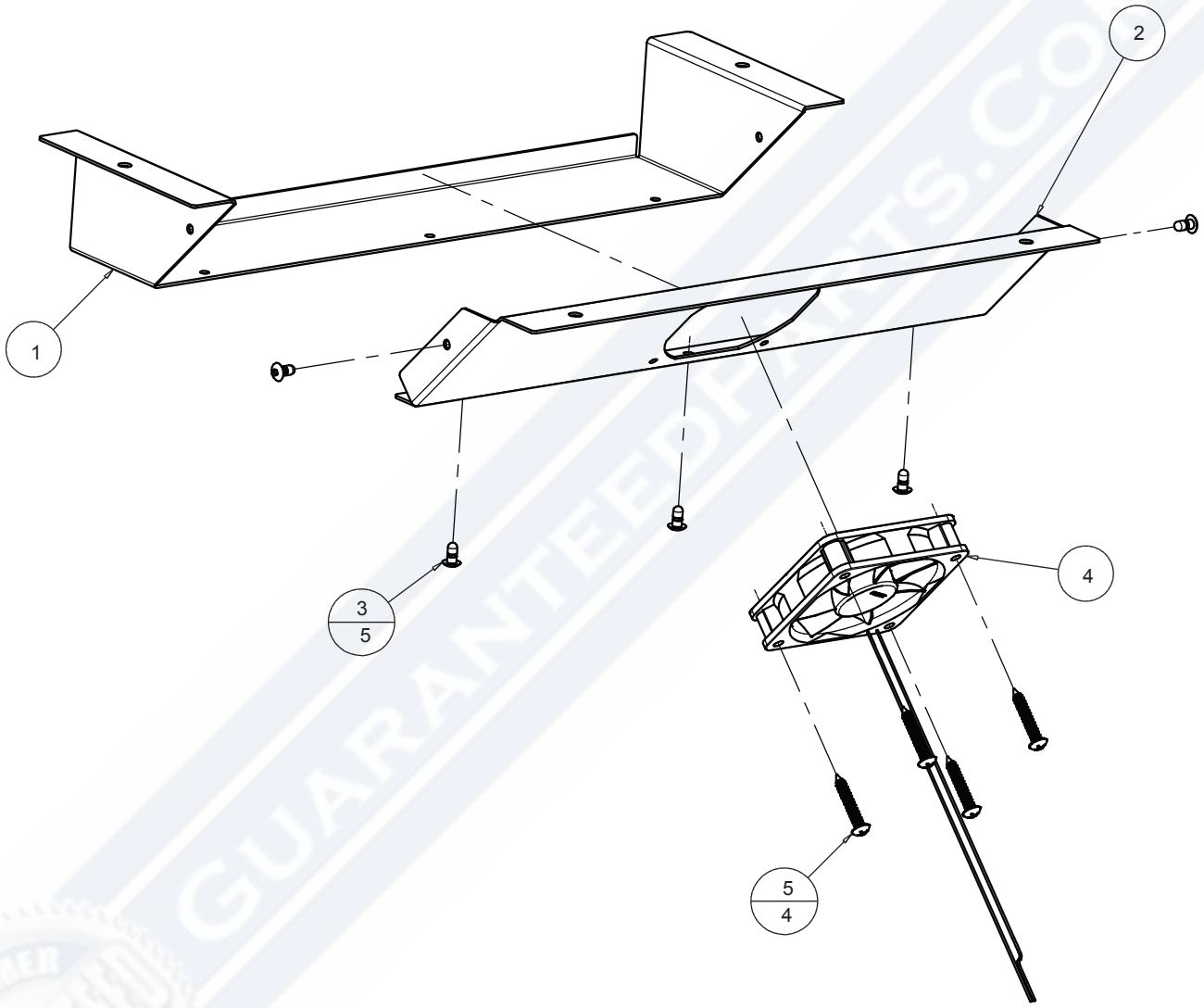

GUARANTEEDPARTS.COM

Drain Pan Fan Assembly

Reference Number	Part Number	Part Name	Quantity
1	250356	PLENUM-DRAIN PAN FAN - BOTTOM	1
2	250357	PLENUM-DRAIN PAN FAN - BACK	1
3	300003	RIVET-1/8" MULTIGRIP	5
4	799640	FAN-DRAIN PAN	1
5	300062	SCREW-#6-20 x 7/8"	4

GUARANTEEDPARTS.COM
CUSTOMER GUARANTEED SATISFACTION

Freezer Door Assembly

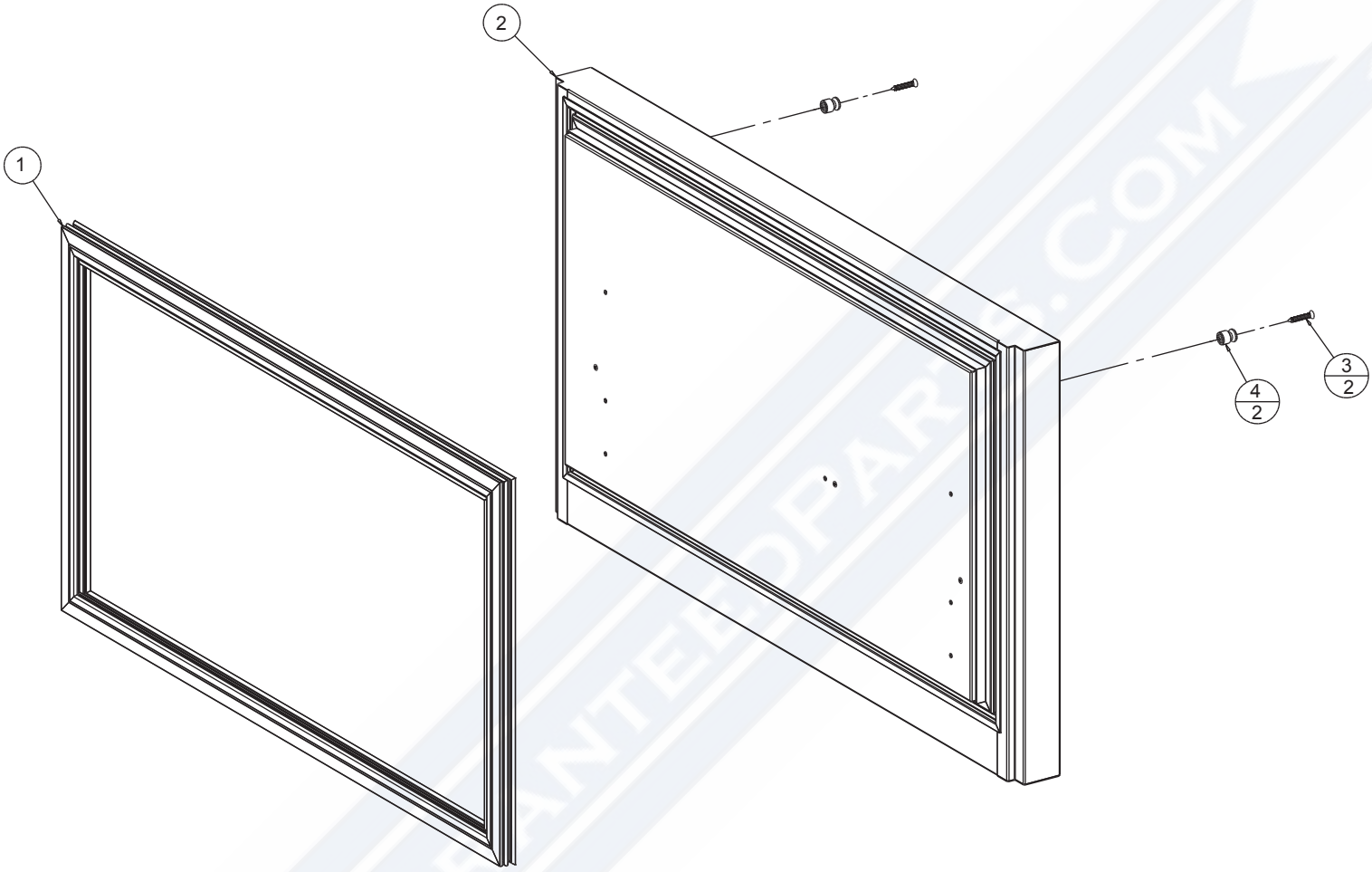

GUARANTEEDPARTS.COM
CUSTOMER SATISFACTION GUARANTEED

Freezer Door Assembly

Reference Number	Part Number	Part Name	Quantity
1	799061	GASKET-FZ DOOR ASSY	1
2	950122	FZ DOOR FOAM ASSY	1
3	300034	SCREW-10-16 x 1.25" SM	2
4	799394	MOUNT-HANDLE	2

GUARANTEEDPARTS.COM

Door Hinge Assembly

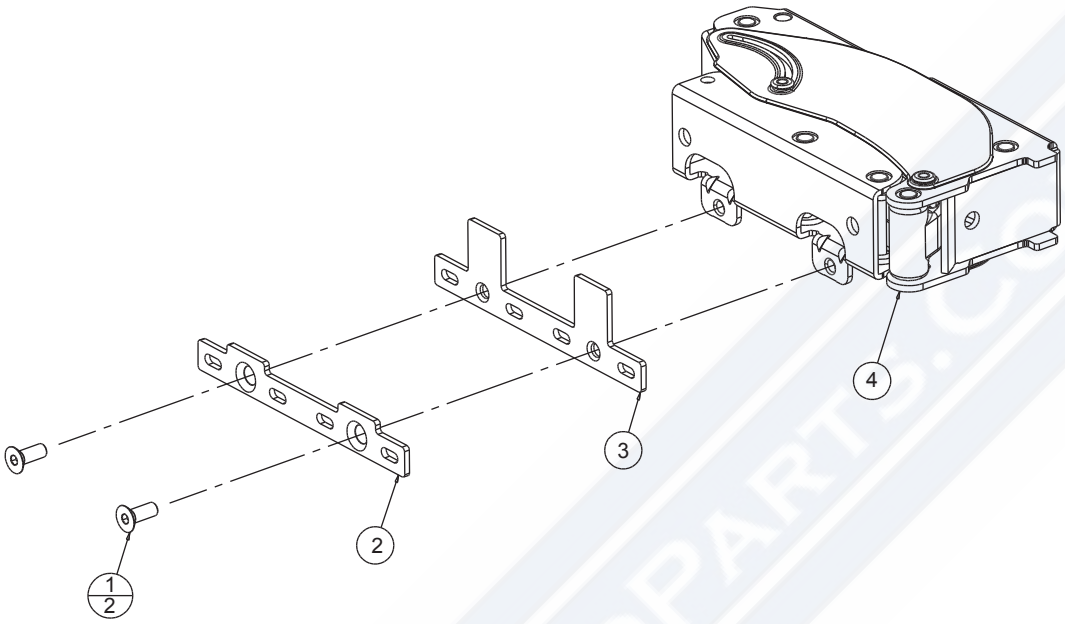

Top Right Hand

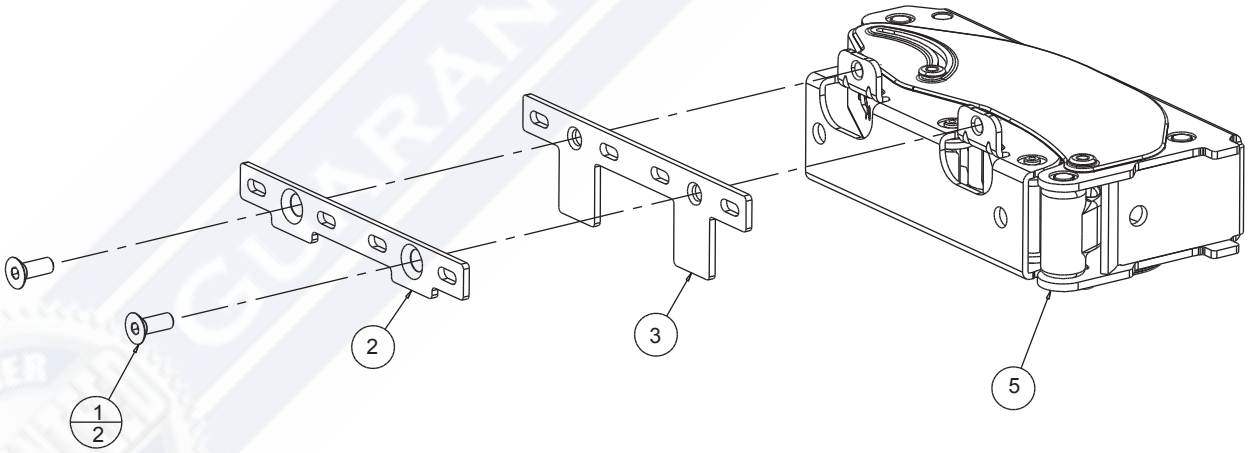

Bottom Right Hand

Door Hinge Assembly

Reference Number	Part Number	Part Name	Quantity
1	300064	SCREW-M6-1.0 x 16mm (10.9)	2
2	799659	BRACKET-DOOR HINGE OUTER	1
3	799601	BRACKET-HINGE DOOR INNER	1
4	742714	HINGE-TOP RH/BOTTOM LH	1
5	742715	HINGE-BOTTOM RH/TOP LH	1

GUARANTEEDPARTS.COM
GUARANTEED CUSTOMER SATISFACTION