BLUESTAR

Parts Manual
Gas Range

RNB244BV2
RNB24CBV2
RNB24GV2
RNB24FTV2
RNB304BV2

October 2020

Table of Contents

Page	Description
1-2	Cabinet Assembly RNB24
3-4	Cabinet Assembly RNB30
5-6	Burner Cavity Assembly RNB24
7-8	Burner Cavity Assembly RNB30
9-10	Cooktop Assembly RNB244B
11-12	Cooktop Assembly RNB304B
13-14	Cooktop Assembly RNB24CB
15-16	Charbroiler Assembly RNB24CB
17-18	Cooktop Assembly RNB24G
19-20	Griddle Assembly RNB24G
21-22	Cooktop Assembly RNB24FT
23-24	French Top Assembly RNB24FT
25-26	Burner Box Assembly RNB24
27-28	Burner Box Assembly RNB30
29-30	Cavity Back Assembly RNB24
31-32	Cavity Back Assembly RNB30
33-34	Cavity Top Assembly RNB24
35-36	Cavity Top Assembly RNB30
37-38	Control Panel Assembly RNB244B
39-40	Control Panel Assembly RNB304B
41-42	Control Panel Assembly RNB24CB
43-44	Control Panel Assembly RNB24G
45-46	Control Panel Assembly RNB24FT
47-48	Grease Pan Assembly RNB24
49-50	Grease Pan Assembly RNB30
51-52	Oven Bottom Assembly RNB24
53-54	Oven Bottom Assembly RNB30
55-56	Oven Door Assembly RNB24
57-58	Oven Door Assembly RNB30
59-60	Oven Flue
61-62	Front 18K 22K Burner Assembly
63-64	Front 15K Burner Assembly
65-66	Rear 15K Burner Assembly
67-68	Rear Simmer Burner Assembly
69	Orifice Chart

RNB24 Cabinet Assembly

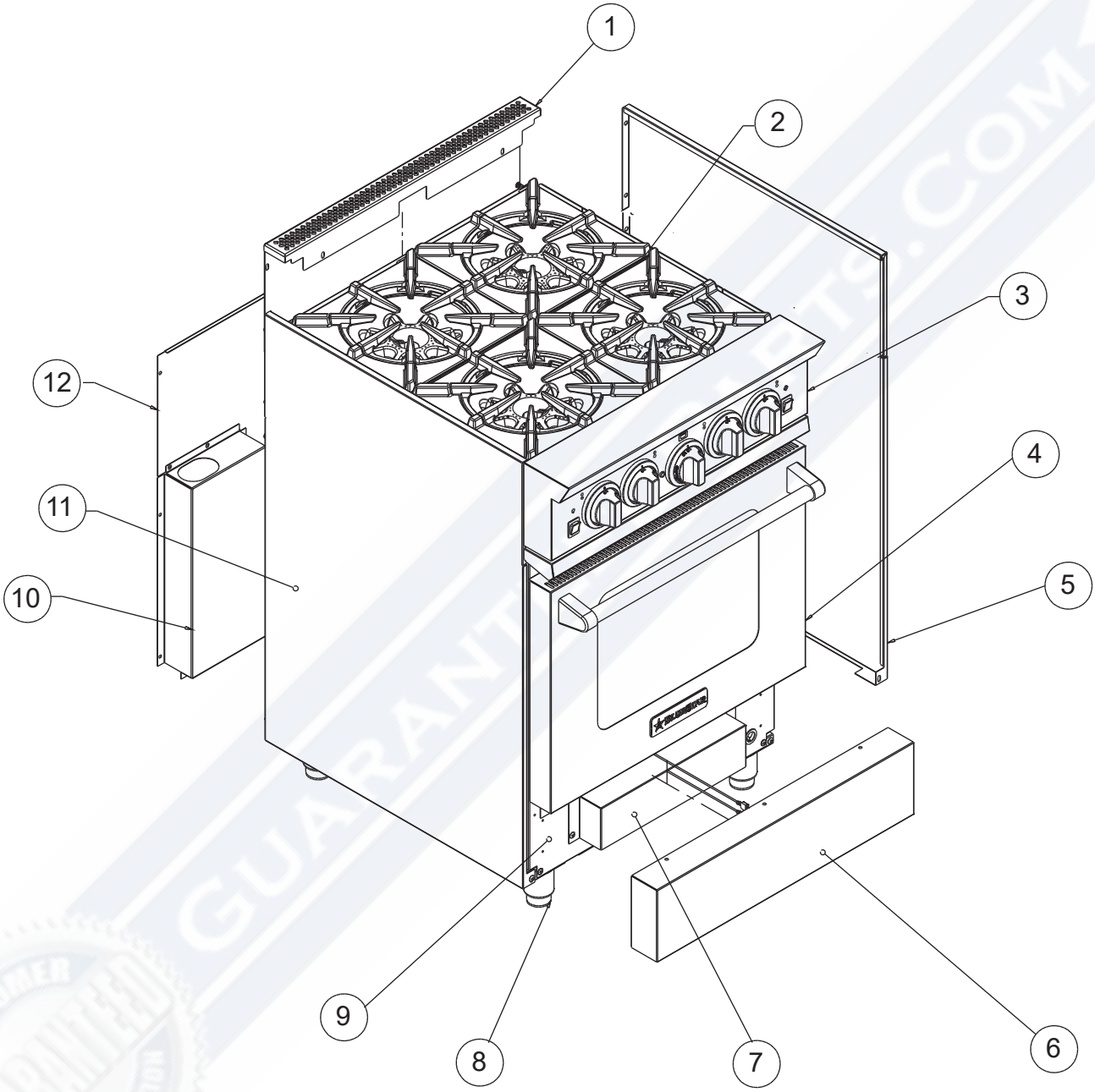

RNB24 Cabinet Assembly

Reference Number	Part Number	Part Name	Quantity
1	118400	BACKGUARD GRATE HEIGHT 24	1
2	904111	ASM COOKTOP RNB4B24	1
3	904120	ASM CONTROL PANEL RNB4B24	1
4	600344	SA OVEN DOOR RNB RCS 24	1
5	113311	BODY SIDE RT 30-36	1
6	113620	KICK PANEL BSP 24	1
7	101418	KICK PANEL CHANNEL	1
8	723101	SS LEG 2" DIA. 2 1/2"	4
9	904106	ASM TUBE BURNER CAVITY V2 24	1
10	128006	BACK SIDE CONNECTION	1
11	113212	BODY SIDE LT 30-36	1
12	118751	MAIN BACK 24	1

GUARANTEEDPARTS.COM
CUSTOMER SATISFACTION GUARANTEED

RNB30 Cabinet Assembly

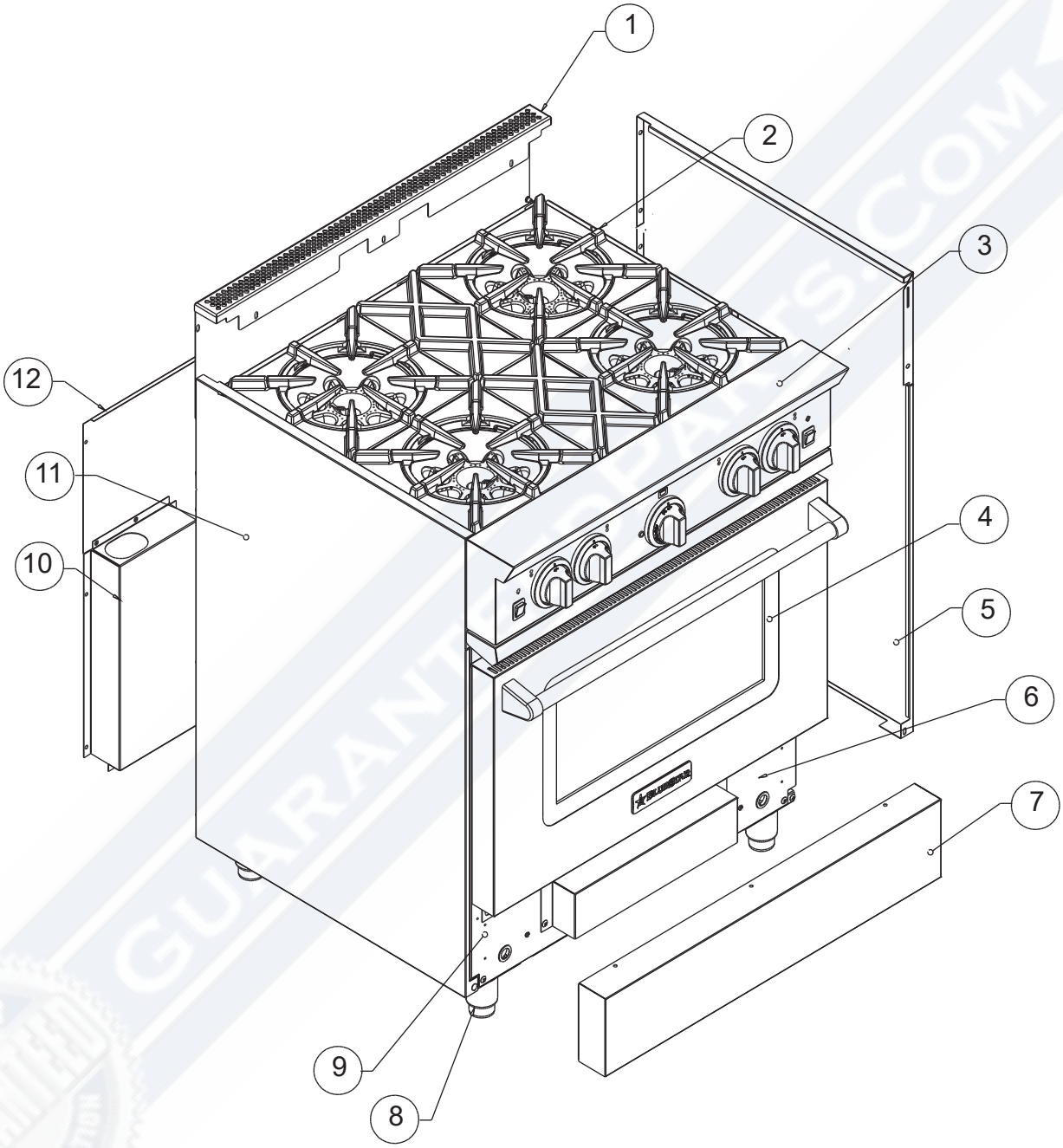

RNB30 Cabinet Assembly

Reference Number	Part Number	Part Name	Quantity
1	118401	BACKGUARD GRATE HGT 30	1
2	905312	ASM COOKTOP RNB4B30	1
3	905347	ASM CONTROL PANEL RNB4B30	1
4	600345	SA OVEN DOOR RCS RNB 30	1
5	113331	BODY SIDE RANGE BTM RGT 24-60	1
6	101416	KICK PANEL CHANNEL	1
7	113540	KICK PANEL BSP 30	1
8	723101	SS LEG 2" DIA. 2 1/2"	4
9	921001	ASM TUBE BURNER CAVITY V2 30	1
10	128006	BACK SIDE CONNECTION	1
11	113332	BODY SIDE RANGE BTM LEFT 24-60	1
12	118752	MAIN BACK 30	1

GUARANTEEDPARTS.COM
CUSTOMER SATISFACTION GUARANTEED

RNB24 Burner Cavity Assembly

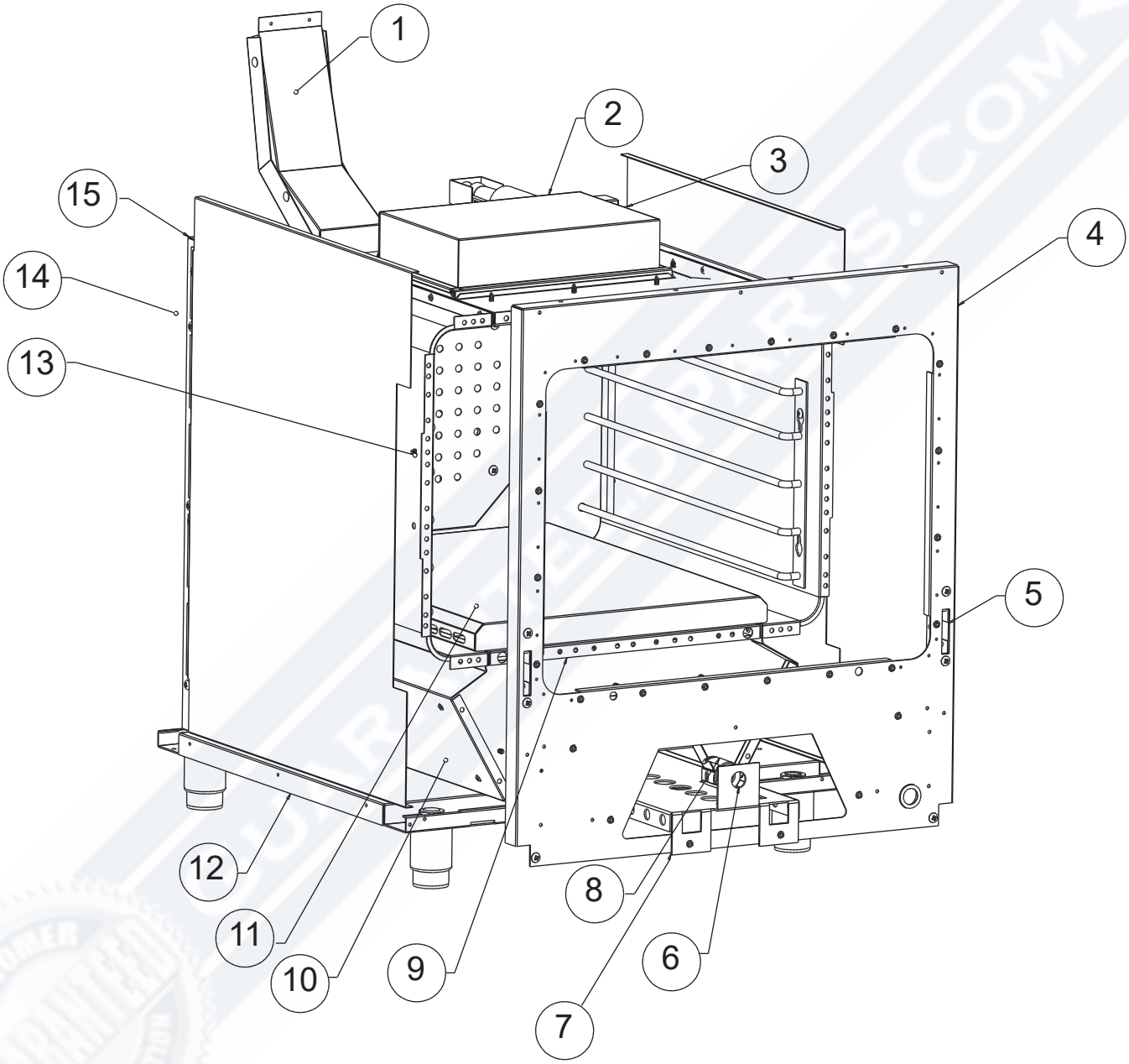

RNB24 Burner Cavity Assembly

Reference Number	Part Number	Part Name	Quantity
1	600029	ASM ANGLED 2 SLOPE FLUE	1
2	904107	ASM CAVITY TOP LINER V2 24	1
3	904108	ASM CAVITY BACK V2 24	1
4	174750	FRONT FRAME V2 24	1
5	742802	HINGE RECEIVER KEYSTONE	2
6	703304	SHORT IGNITOR	1
7	101410	SHORT BURNER SUPPORT	1
8	703203	SHORT OVEN BURNER	1
9	187702	CAVITY STRIP 24	2
10	904109	ASM COMBUSTION CHAMBER V2 24	1
11	904118	ASM OVEN BOTTOM V2 24	1
12	501002	WA BASE 24	1
13	187832	CAVITY SIDE V2	2
14	118773	SIDE INSULATION RETAINER	2
15	189208	CAVITY BACK INSULATION RETAINER 24	1

GUARANTEEDPARTS.COM
CUSTOMER SATISFACTION GUARANTEED

RNB30 Burner Cavity Assembly

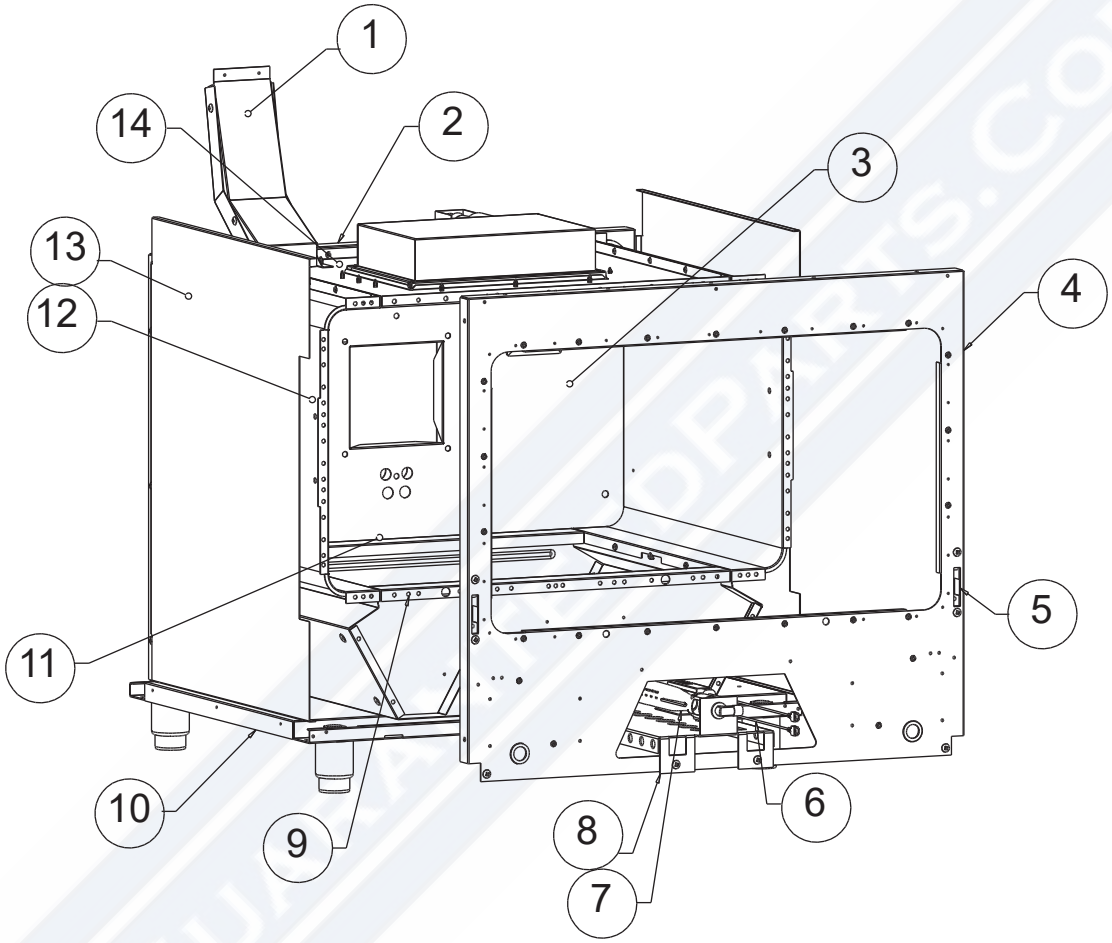

RNB30 Burner Cavity Assembly

Reference Number	Part Number	Part Name	Quantity
1	600029	ASM ANGLED 2 SLOPE FLUE	1
2	118775	CAVITY BACK INSULATION RETAINER	1
3	611002	ASM CAVITY BACK V2 30	1
4	174751	FRONT FRAME V2 30	1
5	742802	HINGE RECEIVER KEYSTONE	2
6	703304	SHORT IGNITOR	1
7	101410	SHORT BURNER SUPPORT	1
8	703203	SHORT OVEN BURNER	1
9	187817	CAVITY STRIP 30	2
10	501003	WA BASE 30	1
11	905310	ASM OVEN BOTTOM V2 30	1
12	187832	CAVITY SIDE V2	1
13	118773	SIDE INSULATION RETAINER	2
14	600021	ASM CAVITY TOP LINER V2 30	1

GUARANTEEDPARTS.COM

Cooktop Assembly RNB244B

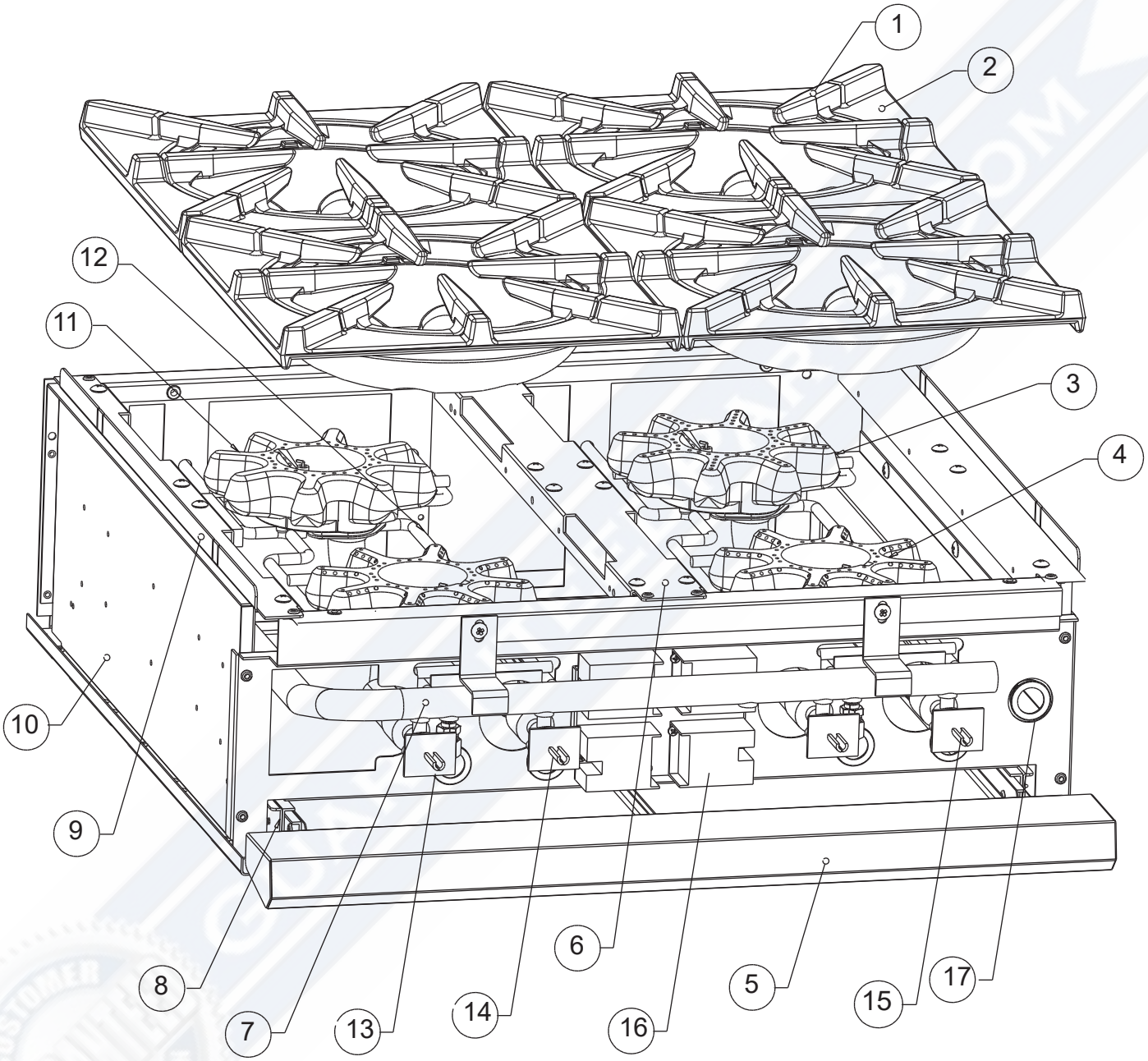

RNB244B Cooktop Assembly

Reference Number	Part Number	Part Name	Quantity
1	700901	GRATE-RING, MATTE BLACK	4
2	700801	GRATE-TOP, MATTE BLACK	4
3	600084	SA REAR 15 K BURNER	1
4	600086	SA FRONT 18K 22K BURNER	2
5	904112	ASM GREASE PAN RNB 24	1
6	700002	TOP SUPPORT CENTER OB	1
7	601106	ASM MANIFOLD 4B 24	1
8	101650	GREASE PAN GUIDE	2
9	101217	TOP SUPPT SIDE OB	2
10	904119	ASM BURNER BOX V2 24	1
11	600083	REAR SIMMER BURNER	1
12	704504	S/S BURNER SUPPORT	2
13	706101	FISHPAPER	6
14	701805	SB op top gas valve L777MZ-82Z	6
15	701901	open top Switch 25070-44	6
16	729204	Sngl Pt Spark Module R1120A-1	6
17	741201	1" Snap Bushing	4
N/S	750551	HARNESS-4 WIRE SINGLE PT	1
N/S	716127	24" RANGE HARNESS	1
N/S	735902	T6-18 3/8" OD SS Flex Tubing	1
N/S	729603	T6-30 3/8" SS Flex Tubing	1
N/S	729605	T6-60 3/8" SS Flex Tubing (ove	1
N/S	741910	IGNITION WIRE, RT AGL, OB, 22"	3
N/S	741901	IGNITION WIRE, OB, 12"	3

Cooktop Assembly RNB304B

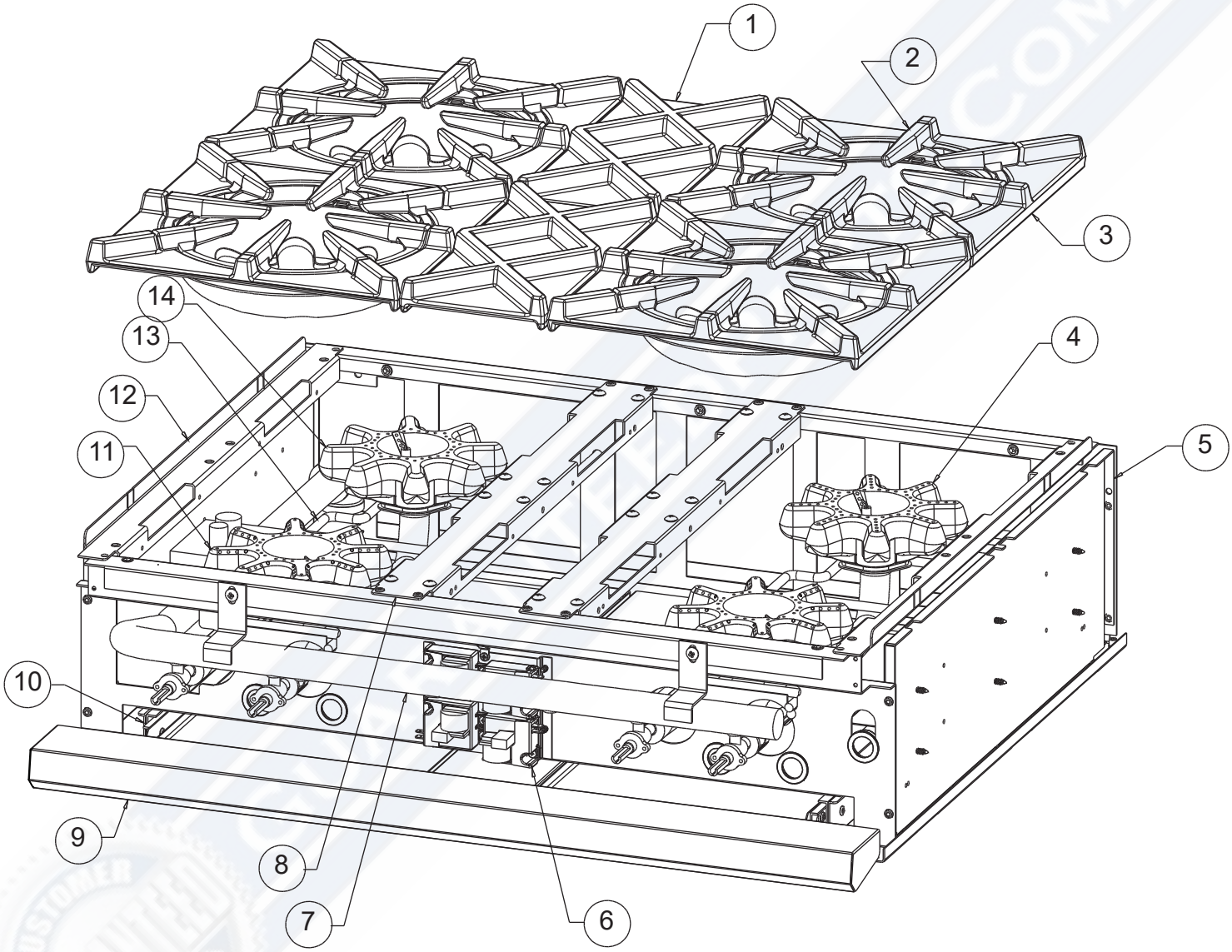

RNB304B Cooktop Assembly

Reference Number	Part Number	Part Name	Quantity
1	743201	CENTER FILLER CAST IRON, MATTE	2
2	700901	STAR BURNER RING GRATE 115350	4
3	700801	SINGLE TOP GRATE 11 5/16"	4
4	600084	SA REAR 15K BURNER	1
5	905313	ASM BURNER BOX V2 30	1
6	729204	ASM SNG-PT SPARK MODULE	4
7	601108	SA MANIFOLD 4B 30	1
8	700002	TOP SUPPORT CENTER OB	2
9	905344	ASM GREASE PAN RNB 30	1
10	101650	GREASE PAN GUIDE	2
11	600086	SA FRONT 18K 22K BURNER	2
12	101217	TOP SUPPORT SIDE OB	2
13	704504	S/S BURNER SUPPORT	2
14	600083	SA REAR SIMMER BURNER	1
N/S	750551	HARNESS-4 WIRE SINGLE PT	1
N/S	716127	24" RANGE HARNESS	1
N/S	735902	T6-18 3/8" OD SS Flex Tubing	1
N/S	729603	T6-30 3/8" SS Flex Tubing	1
N/S	729605	T6-60 3/8" SS Flex Tubing (ove	1
N/S	741910	IGNITION WIRE, RT AGL, OB, 22"	3
N/S	741901	IGNITION WIRE, OB, 12"	3

Cooktop Assembly RNB24CB

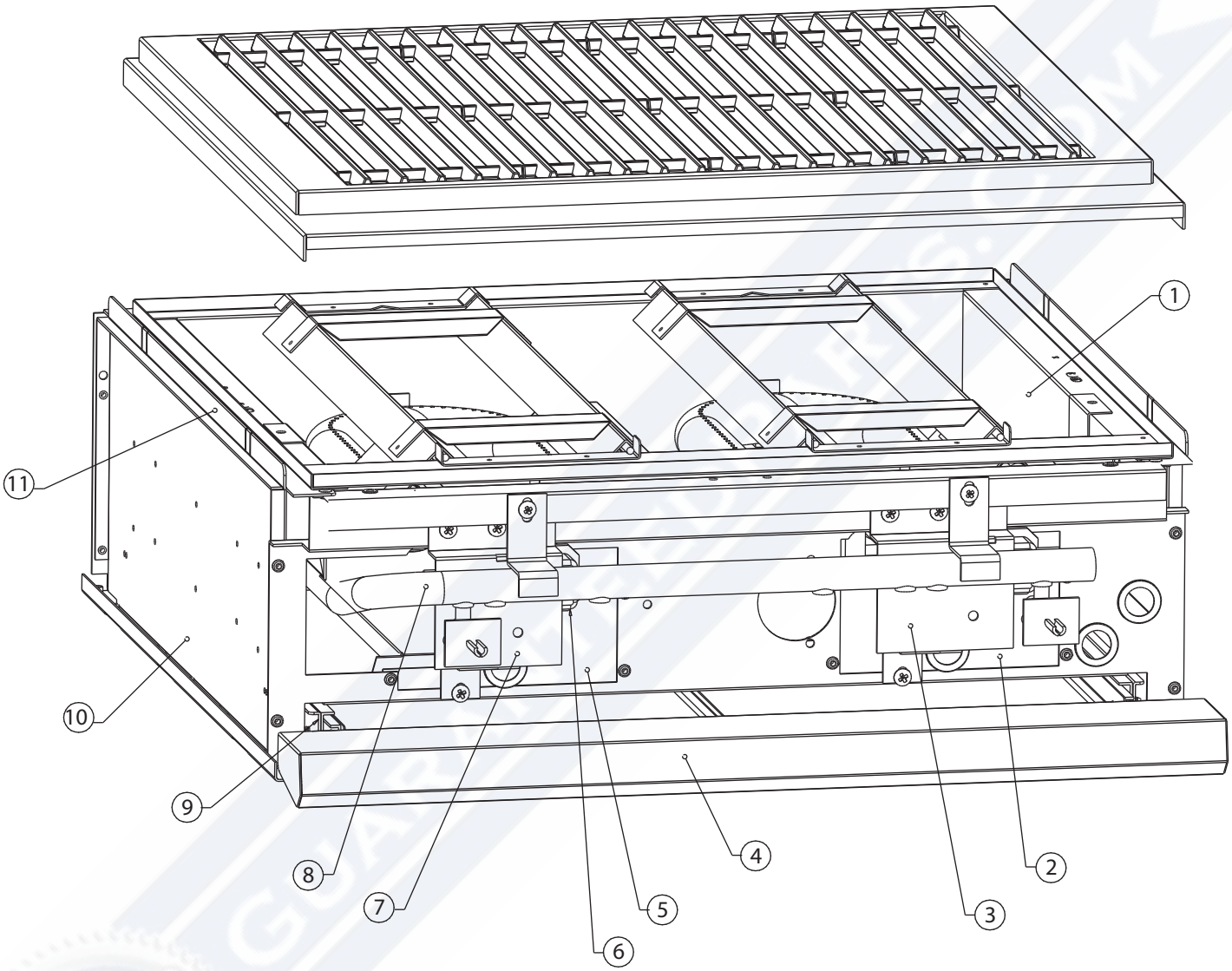

RNB244CB Cooktop Assembly

Reference Number	Part Number	Part Name	Quantity
1	906316	ASM CHARBROILER V2 24	1
2	100247	PATCH CHARBROILER V2	1
3	100256	THERMOVALVE CB BRACKET RIGHT 24	1
4	904112	ASM GREASE PAN RNB RCS 24	1
5	100259	PATCH LEFT CHARBROILER V2	1
6	705401	SINGLE THERMOVALVE Y-30128-68	2
7	100257	THERMOVALVE CB BRACKET LEFT 24	1
8	901126	ASM MANIFOLD CB 24	1
9	101650	GREASE PAN GUIDE	2
10	901121	ASM BURNER BOX V2 24	1
11	101217	TOP SUPPORT SIDE OB	2
N/S	716120	HARNESS-WIRE ADD ON CHARBROILER	1
N/S	750459	HARNESS-CONTROL PANEL	1

GUARANTEED PARTS.COM
CUSTOMER SATISFACTION GUARANTEED

Charbroiler Assembly RNB24CB

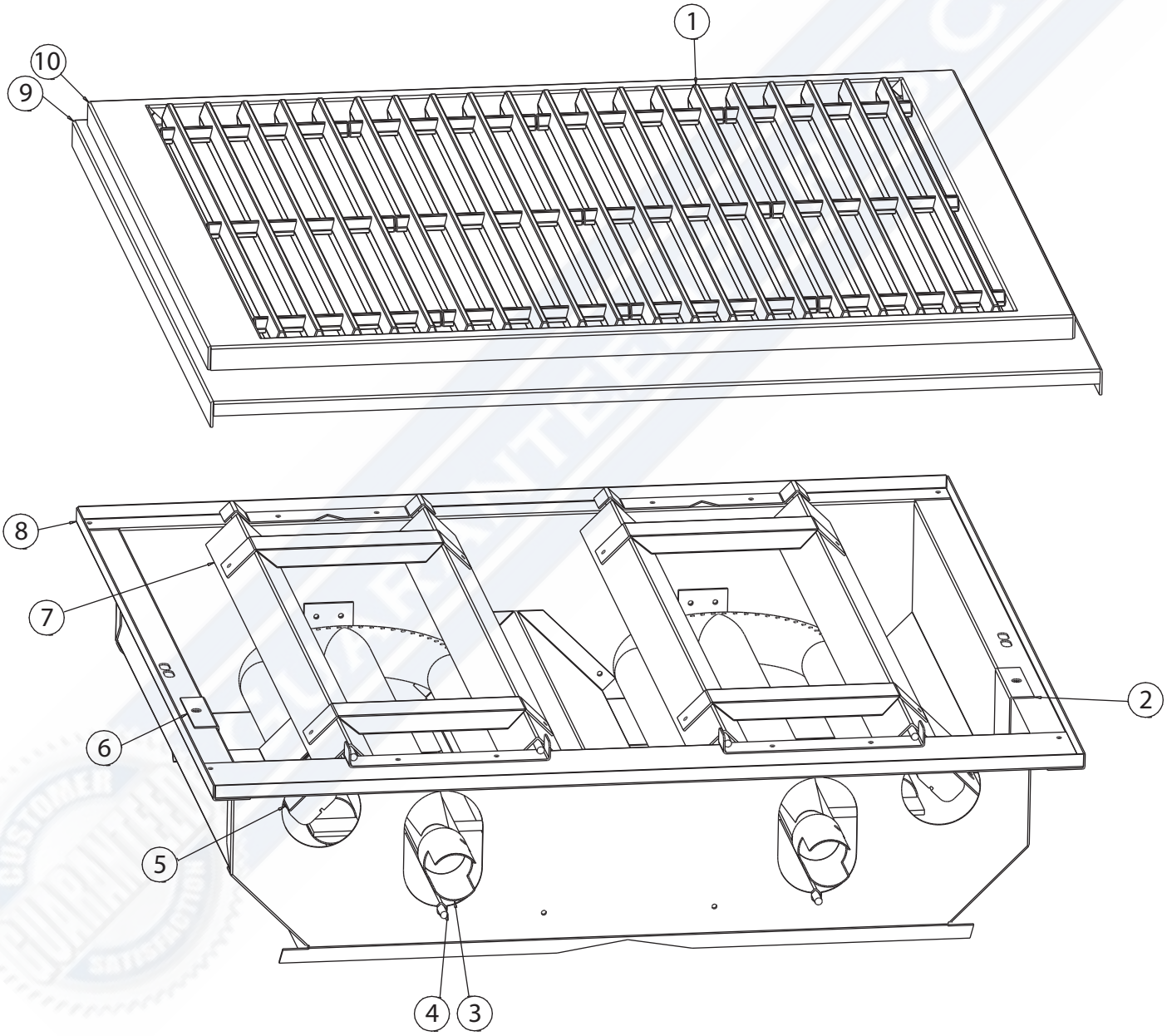

RNB24CB Charbroiler Assembly

Reference Number	Part Number	Part Name	Quantity
1	736602	GRATE-CHARBROILER, MATTE BLACK	4
2	163904	BRACKET IGNITOR CB 24 RT	1
3	703201	CB BURNER	2
4	502601	WA GREASE BAFFLE	1
5	703304	SHORT IGNITER ASSEMBLY	1
6	163903	BRACKET IGNITOR CB 24 LT	1
7	500215	WA CB FLAVOR SAVOR V2	1
8	500211	WA CHAR BROILER BOX 24" V2	1
9	171722	CHAR BROILER TOP FRAME 24" V2	1
10	171724	CHAR BROILER SKIRT 24" V2	1

GUARANTEEDPARTS.COM
CUSTOMER SATISFACTION GUARANTEED

Cooktop Assembly RNB24G

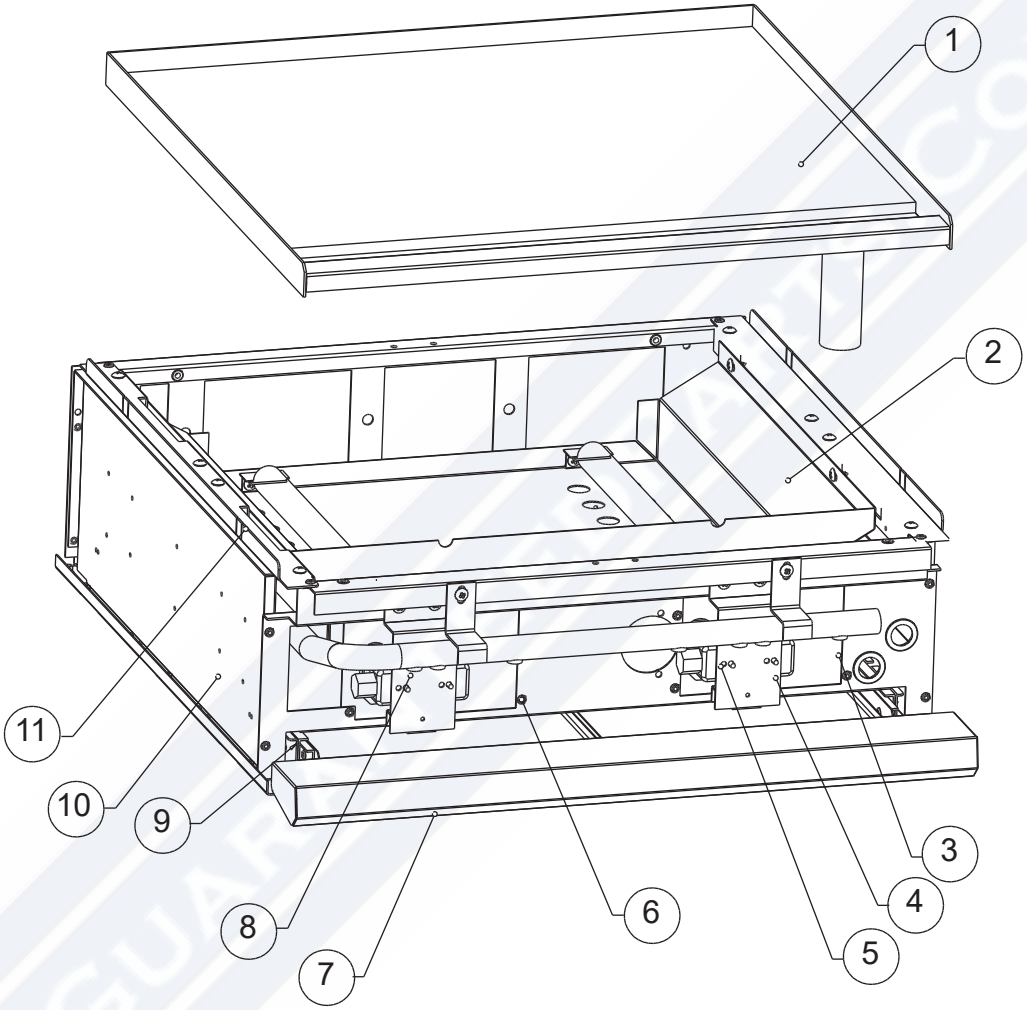

RNB24G Cooktop Assembly

Reference Number	Part Number	Part Name	Quantity
1	500407	WA GRIDDLE PLATE 24"	1
2	905538	ASM GRIDDLE V2 24	1
3	100246	PATCH GRIDDLE V2	1
4	100252	THERMOVALVE GRIDDLE BRACKET	2
5	705401	SINGLE THERMOVALVE Y-30128-68	2
6	100258	PATCH LEFT GRIDDLE V2	1
7	904112	ASM GREASE PAN RNB RCS 24	1
8	901122	ASM MANIFOLD G 24	1
9	101650	GREASE PAN GUIDE	2
10	901121	ASM BURNER BOX V2 24	1
11	101217	TOP SUPPORT SIDE OB	2
N/S	750460	HARNESS-MANIFOLD WIRE, GRIDDLE	1
N/S	750459	HARNESS-CONTROL PANEL 24	1

GUARANTEED PARTS
CUSTOMER SATISFACTION GUARANTEED

Griddle Assembly RNB24G

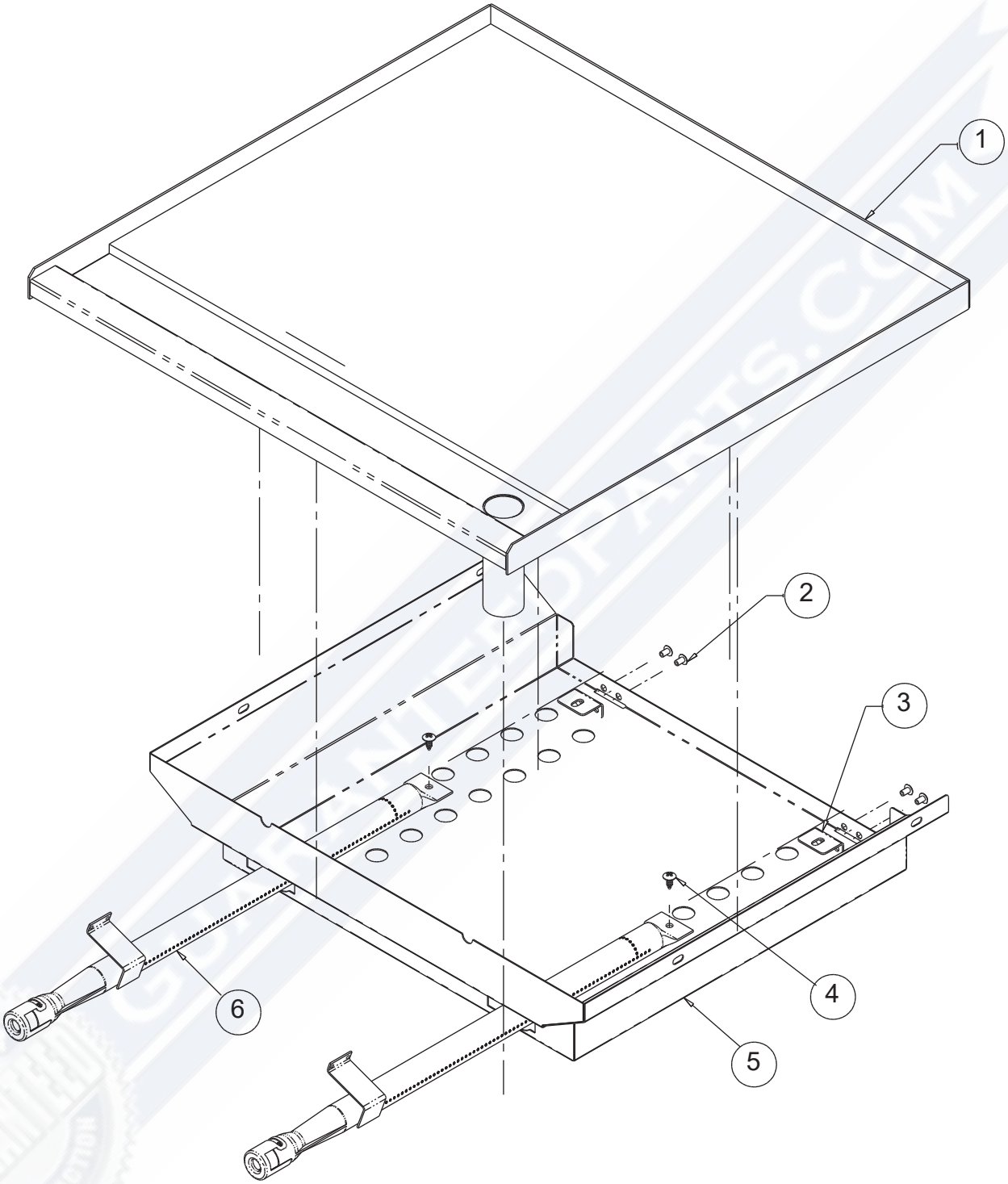

RNB24G Griddle Assembly

Reference Number	Part Number	Part Name	Quantity
1	500402	Griddle Plate W/A 24"	1
2	303901	Rivet 3-16 x 9-16 Lo-Profile	4
3	100300	BRKT, SUPPORT, GRIDDLE BURNER	2
4	303201	Screw #10x1/2 PH Truss ZP	2
5	100278	BOX, INSERT, 24IN GRIDDLE	1
6	706201	Burner Griddle 2801G0126A	2

GUARANTEEDPARTS.COM
CUSTOMER SATISFACTION GUARANTEED

Cooktop Assembly RNB24FT

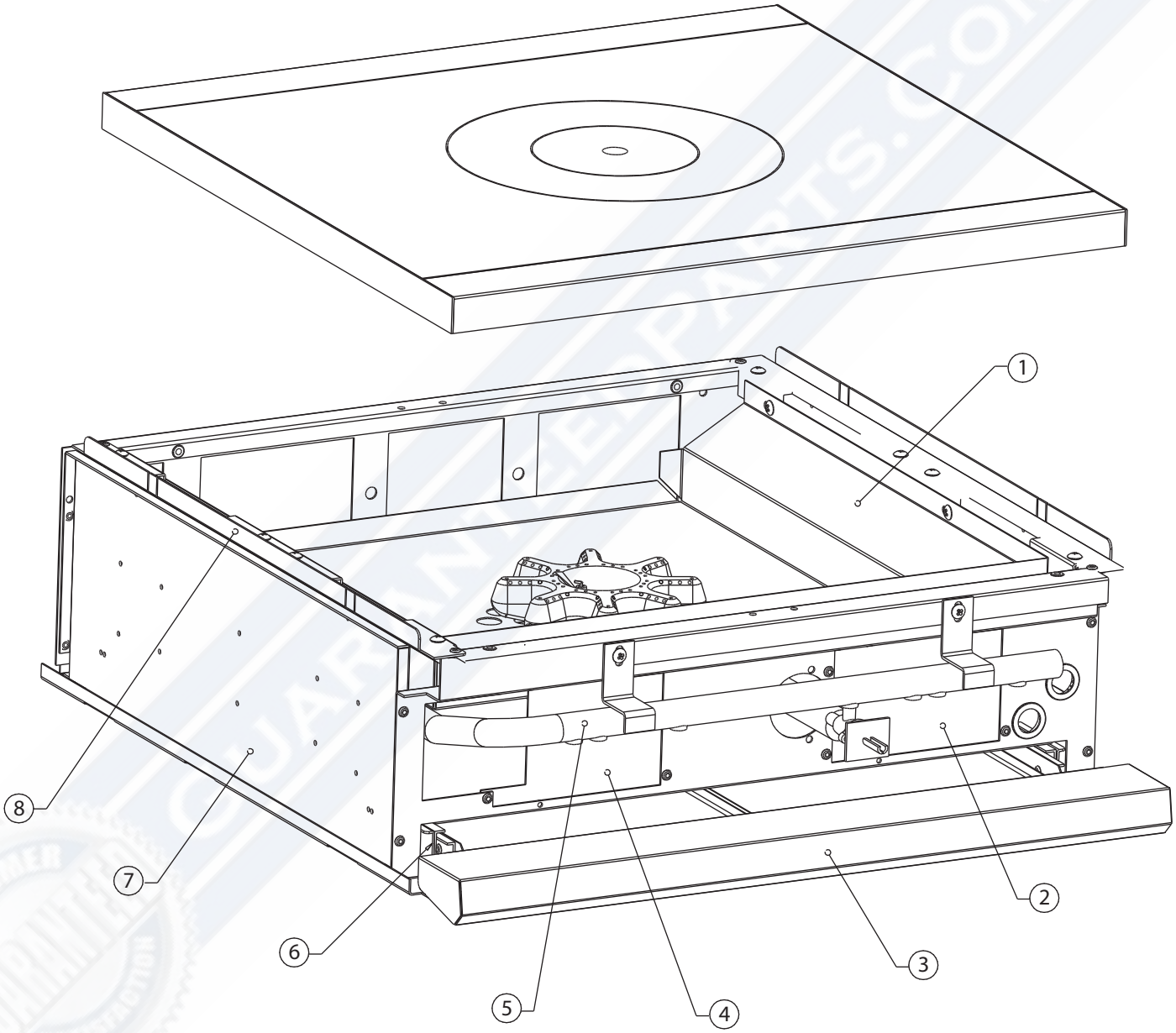

RNB24FT Cooktop Assembly

Reference Number	Part Number	Part Name	Quantity
1	907102	ASM FRENCH TOP V2 24"	1
2	100248	PATCH FRENCH TOP V2	1
3	904112	ASM GREASE PAN RNB RCS 24	1
4	100260	PATCH LEFT FRENCH TOP V2	1
5	901131	ASM MANIFOLD FT 24	1
6	101650	GREASE PAN GUIDE	2
7	901121	ASM BURNER BOX V2 24	1
8	101217	TOP SUPPORT SIDE OB	2
N/S	741901	IGNITION WIRE, OB, 12"	1

GUARANTEEDPARTS.COM
CUSTOMER SATISFACTION GUARANTEED

French Top Assembly RNB24FT

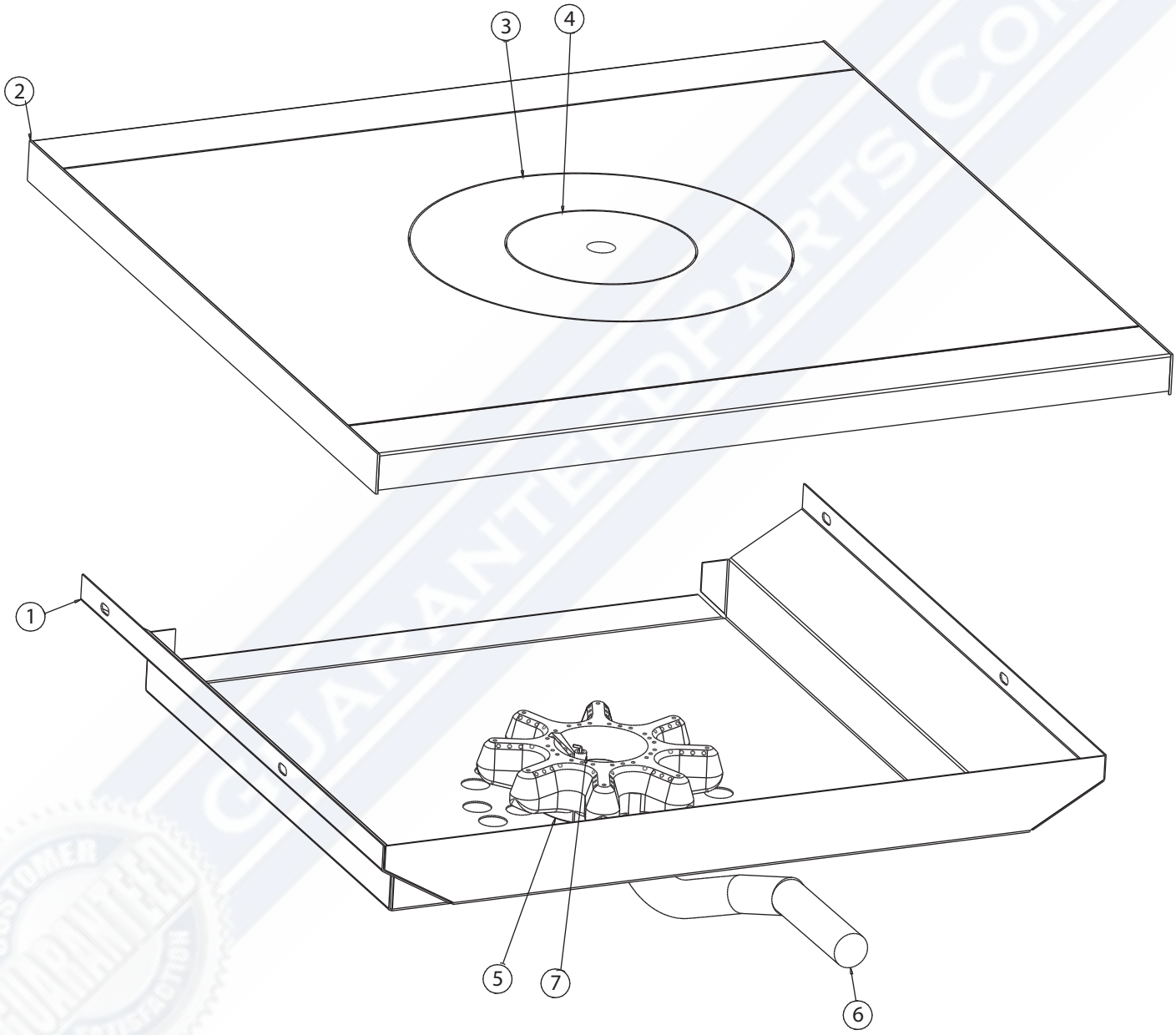

RNB24FT French Top Assembly

Reference Number	Part Number	Part Name	Quantity
1	122323	FRENCH TOP INSERT BOX LEFT 24	1
2	500412	WA FRENCH TOP GRIDDLE 24"	1
3	702306	Griddle-French Top Lid	1
4	702307	Griddle-French Top Lid	1
5	729801	8 FINGER STAR BURNER	1
6	733803	French Top Venturi	1
7	741801	Electrode	1
N/S	743301	Gasket, Venturi	1

GUARANTEEDPARTS.COM
CUSTOMER SATISFACTION GUARANTEED

Burner Box Assembly RNB24

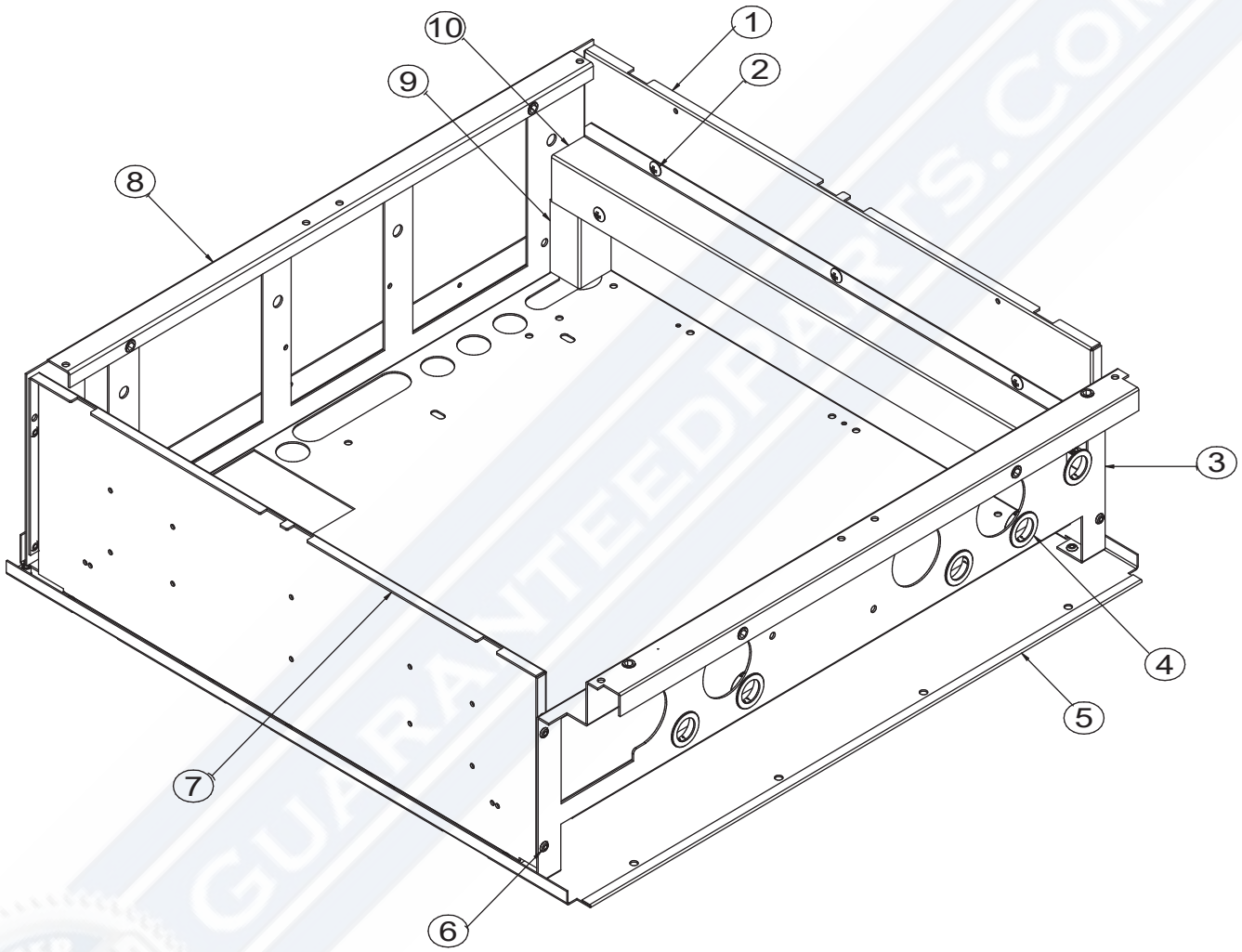

RNB24 Burner Box Assembly

Reference Number	Part Number	Part Name	Quantity
1	101507	BURNER BOX INSUL PANEL BSP	2
2	303201	SCR. #10 X 1/2" PH TRUSS HD ZP	8
3	100230	BURNER BOX FRONT 24 BSP	1
4	741201	1" SNAP BUSHING	5
5	101330	Burner Box Bottom 24	1
6	306301	RIVET, 3/16" COUNTERSINK BLIND	19
7	101507	BURNER BOX INSUL PANEL BSP	2
8	100220	Burner Box Back 24	1
9	101381	WIRE WAY, BOTTOM	1

GUARANTEEDPARTS.COM
CUSTOMER SATISFACTION GUARANTEED

Burner Box Assembly RNB30

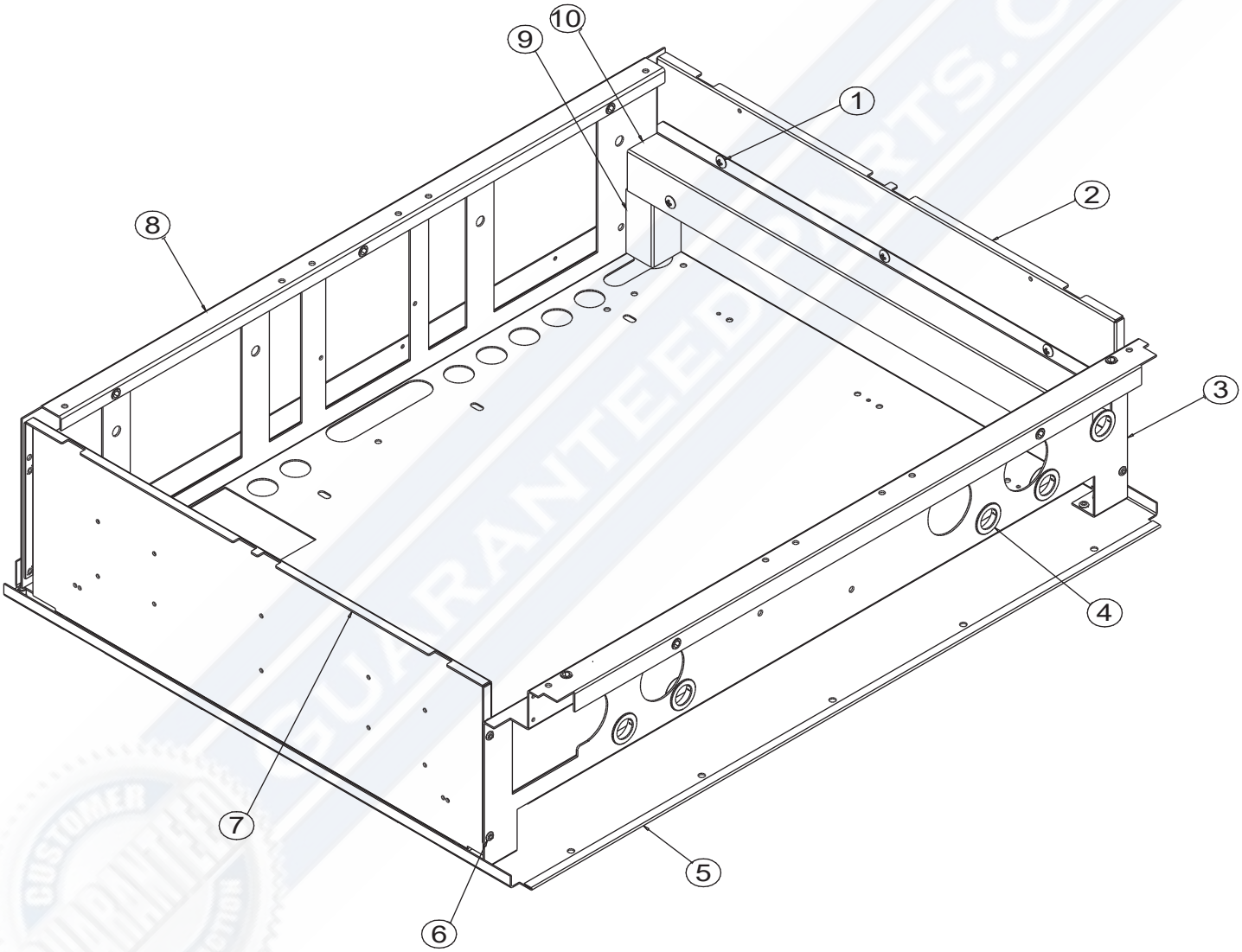

RNB30 Burner Box Assembly

Reference Number	Part Number	Part Name	Quantity
1	303201	SCR. #10 X 1/2" PH TRUSS HD ZP	8
2	101507	BURNER BOX SIDE V2	2
3	100229	BURNER BOX FRONT 30 BSP	1
4	741201	1" SNAP BUSHING	5
5	101329	Burner Box Bottom 30	1
6	306301	RIVET, 3/16" COUNTERSINK BLIND	22
7	101507	BURNER BOX SIDE V2	2
8	306406	10-24 HX INC ZC (AVK)	9
9	101381	WIRE WAY, BOTTOM	1
10	101382	WIRE WAY, TOP	1

GUARANTEEDPARTS.COM
CUSTOMER SATISFACTION GUARANTEED

Cavity Back Assembly RNB24

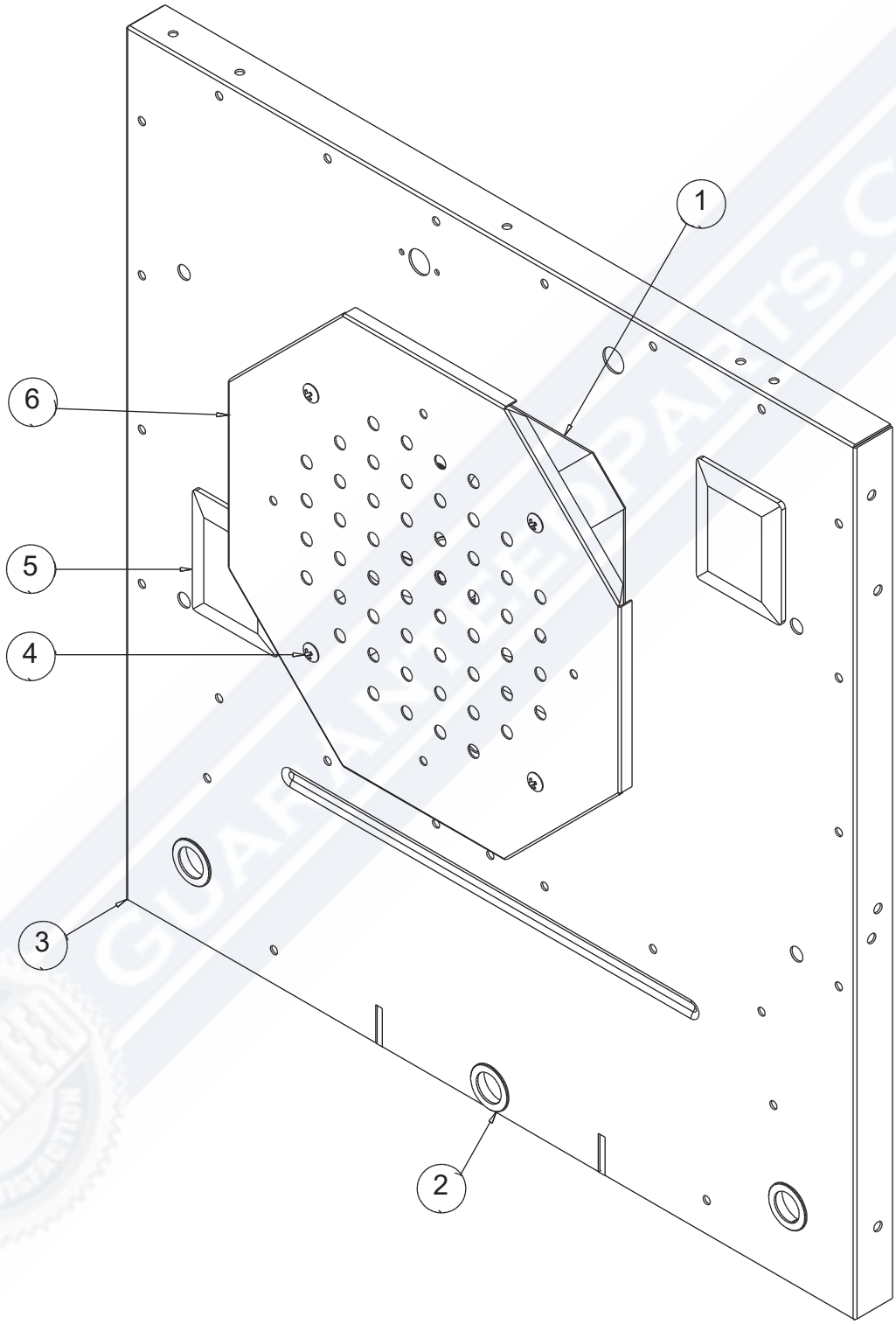

GUARANTEEDPARTS.COM
CUSTOMER SATISFACTION GUARANTEED

RNB24 Cavity Back Assembly

Reference Number	Part Number	Part Name	Quantity
1	600033	SA CONVECTION FAN	1
2	741201	1" SNAP BUSHING	3
3	187918	CAVITY BACK V2 24	1
4	303201	SCR. #10 X 1/2" PH TRUSS HD ZP	4
5	748104	Lamp Assy - 25 W Halogen - Narrow	2
6	199256	OVEN FAN SHIELD ELECTRIC	1
N/S	304202	10-24 x 3-8 SS Truss Head	4
N/S	306406	10-24 HX INC ZC (AVK)	4

GUARANTEEDPARTS.COM
CUSTOMER SATISFACTION GUARANTEED

Cavity Back Assembly RNB30

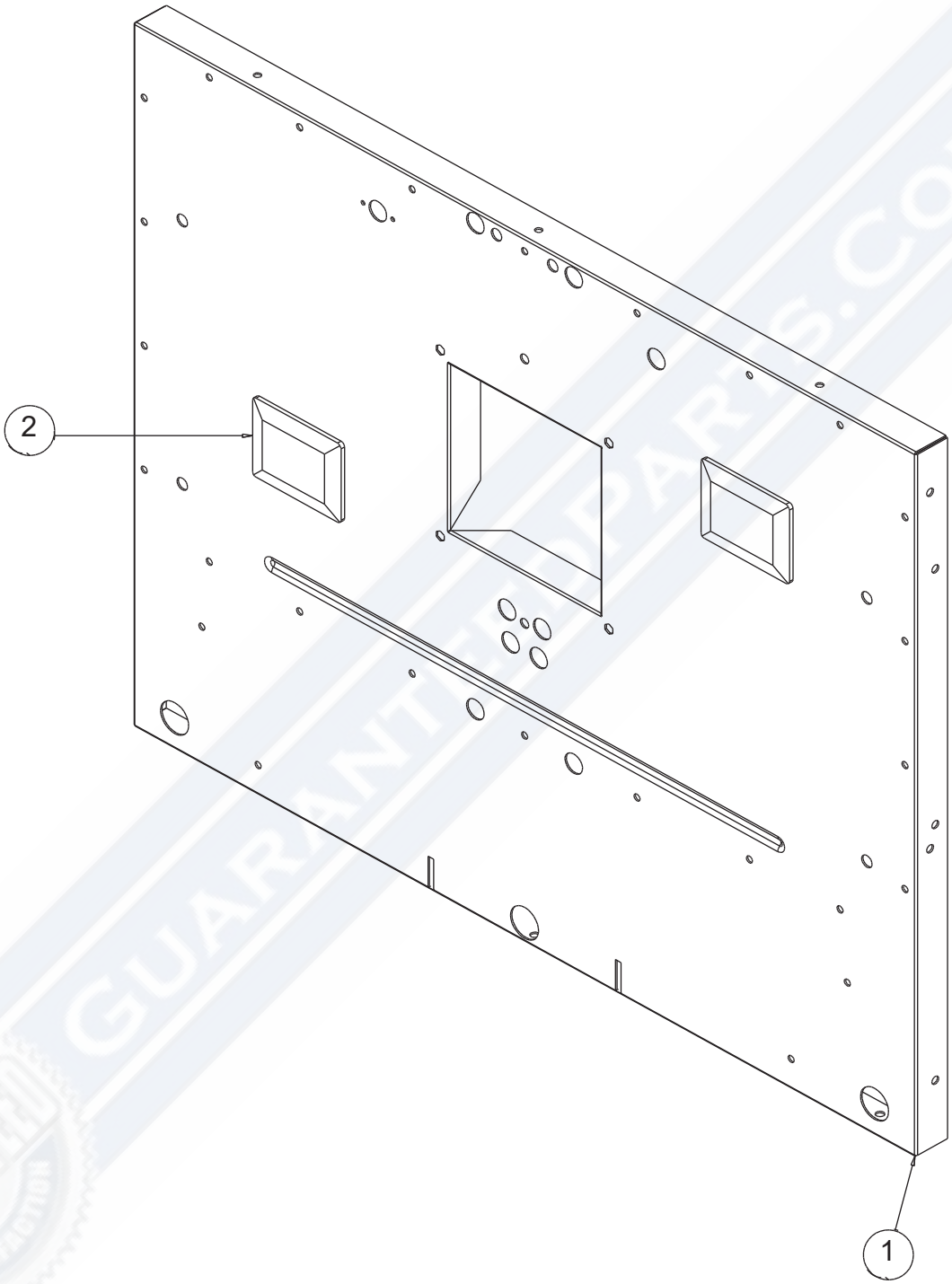

GUARANTEEDPARTS.COM
CUSTOMER GUARANTEED SATISFACTION

RNB30 Cavity Back Assembly

Reference Number	Part Number	Part Name	Quantity
1	187912	CAVITY BACK 30	1
2	748104	Lamp Assy - 25 W Halogen - Narrow	2

GUARANTEEDPARTS.COM

Cavity Top Assembly RNB24

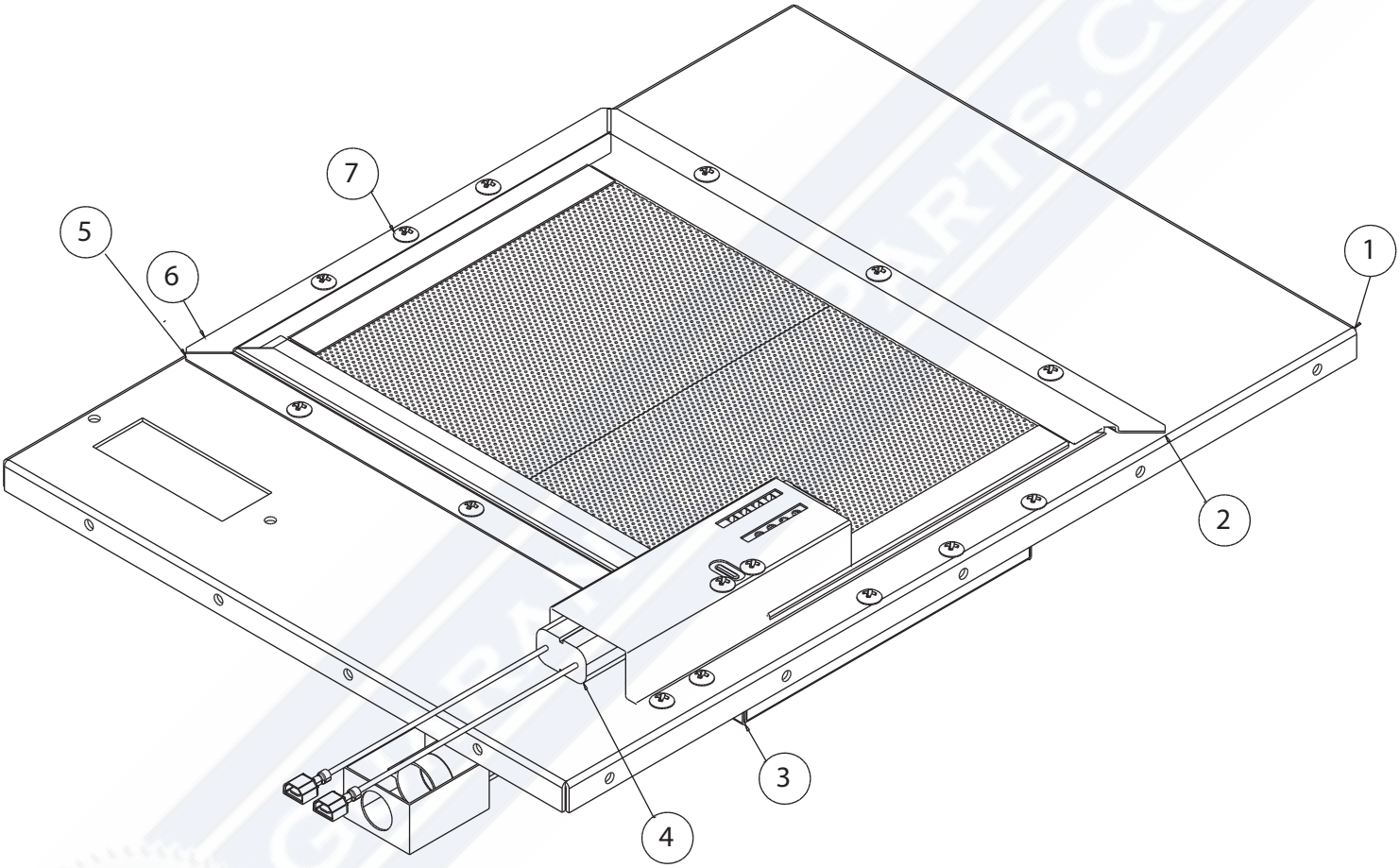

RNB24 Cavity Top Assembly

Reference Number	Part Number	Part Name	Quantity
1	187802	CAVITY TOP 24	1
2	105201	IR TRIM LONG 2 PT	1
3	735501	INFRARED BROILER BURNER 3/8"	1
4	703301	OVEN BURNER IGNITER	1
5	105202	BOILER TRIM, REAR FRAME	1
6	105301	IR TRIM SHORT 2 PT	1
7	303201	SCR. #10 X 1/2" PH TRUSS HD ZP	18

GUARANTEEDPARTS.COM
CUSTOMER SATISFACTION GUARANTEED

Cavity Top Assembly RNB30

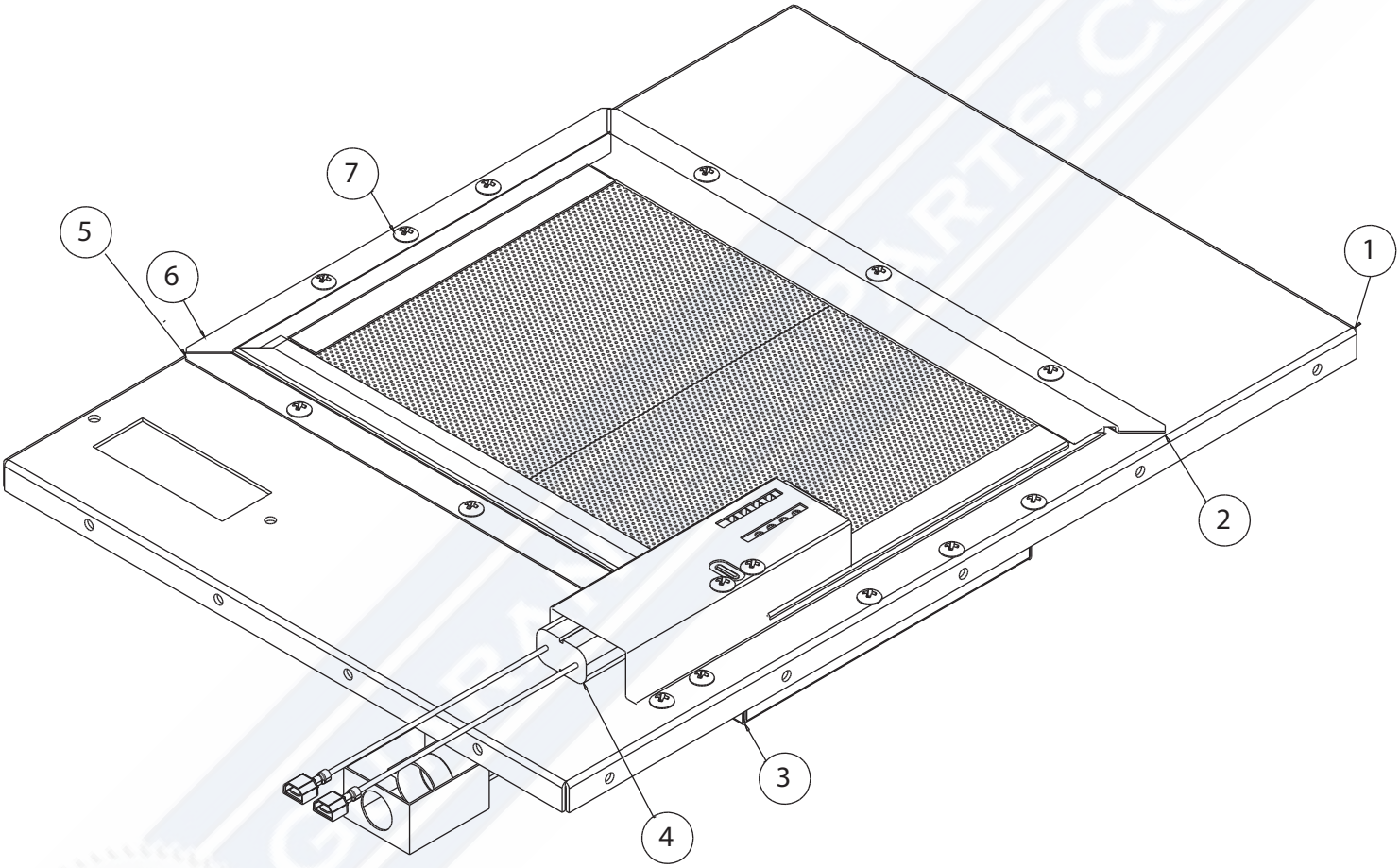

RNB30 Cavity Top Assembly

Reference Number	Part Number	Part Name	Quantity
1	187811	CAVITY TOP 30	1
2	105201	IR TRIM LONG 2 PT	1
3	735501	INFRARED BROILER BURNER 3/8"	1
4	703301	OVEN BURNER IGNITER	1
5	105202	BOILER TRIM, REAR FRAME	1
6	105301	IR TRIM SHORT 2 PT	1
7	303201	SCR. #10 X 1/2" PH TRUSS HD ZP	18

GUARANTEEDPARTS.COM
CUSTOMER SATISFACTION GUARANTEED

Control Panel Assembly RNB244B

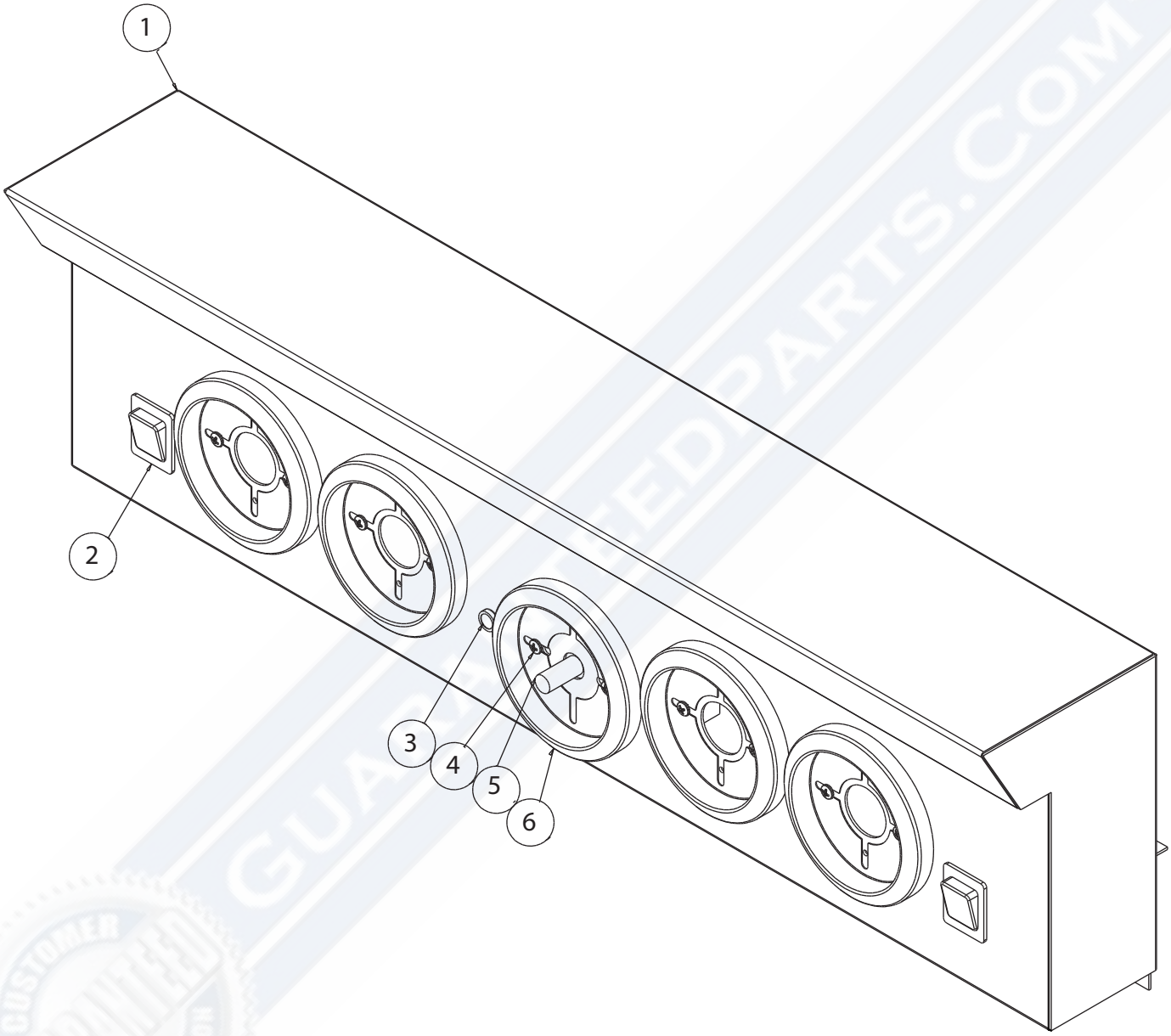

GUARANTEEDPARTS.COM
CUSTOMER SATISFACTION

RNB244B Control Panel Assembly

Reference Number	Part Number	Part Name	Quantity
1	501102	WA CONTROL PANEL RNB4B24	1
2	735003	SWITCH - ROCKER	2
3	728102	INDICATOR LAMP - BLUE	1
4	305201	SCREW 6-32 x PAN HEAD	10
5	799487	OVEN THERMOSTAT	1
6	732101	LARGE BEZEL	5

GUARANTEEDPARTS.COM
CUSTOMER SATISFACTION GUARANTEED

Control Panel Assembly RNB304B

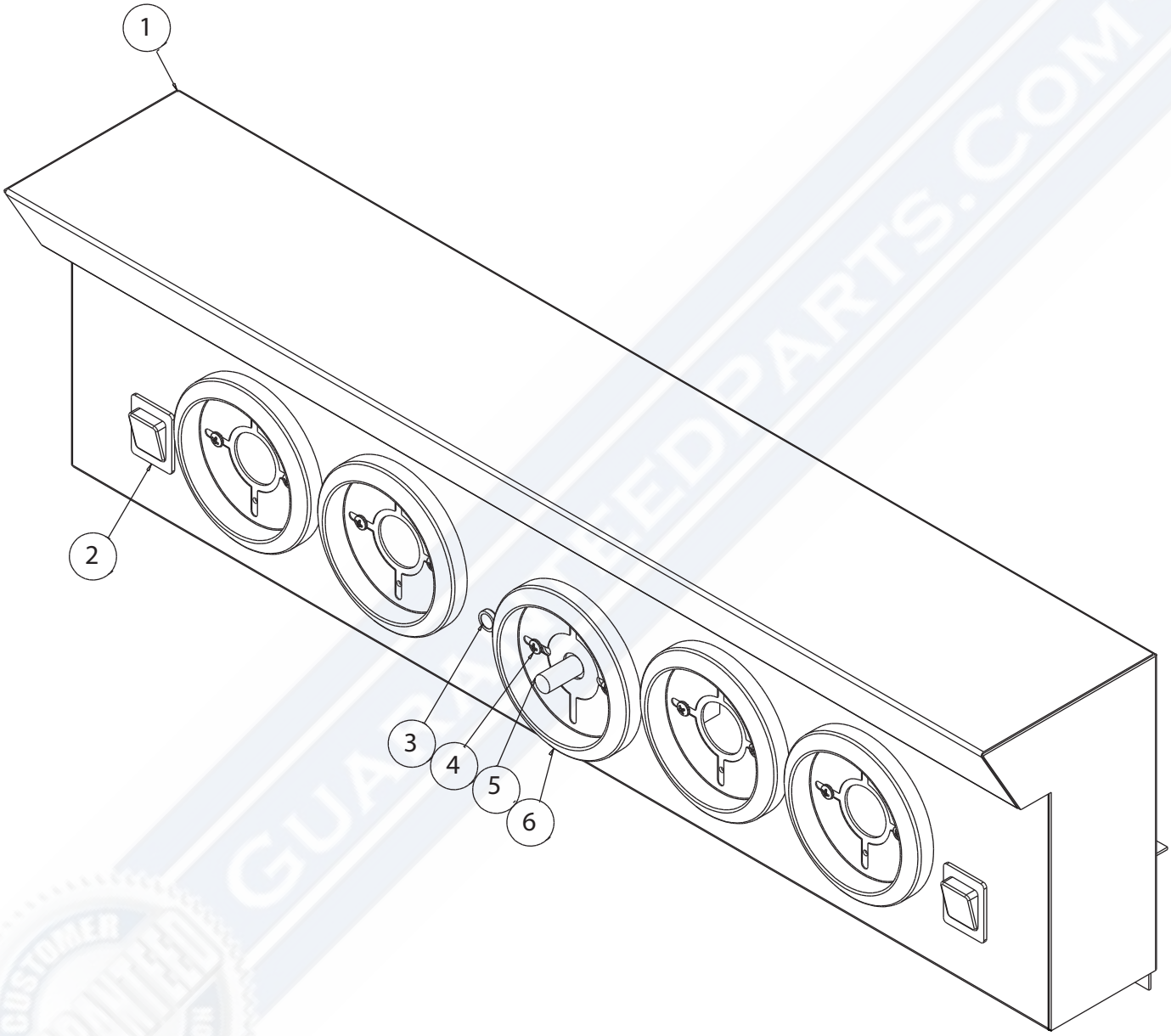

GUARANTEEDPARTS.COM
CUSTOMER GUARANTEED SATISFACTION

RNB304B Control Panel Assembly

Reference Number	Part Number	Part Name	Quantity
1	502726	WA CONTROL PANEL RNB4B30	1
2	735003	SWITCH - ROCKER	2
3	728102	INDICATOR LAMP - BLUE	1
4	305201	SCREW 6-32 x PAN HEAD	10
5	799487	OVEN THERMOSTAT	1
6	732101	LARGE BEZEL	5

GUARANTEEDPARTS.COM
CUSTOMER SATISFACTION GUARANTEED

Control Panel Assembly RNB24CB

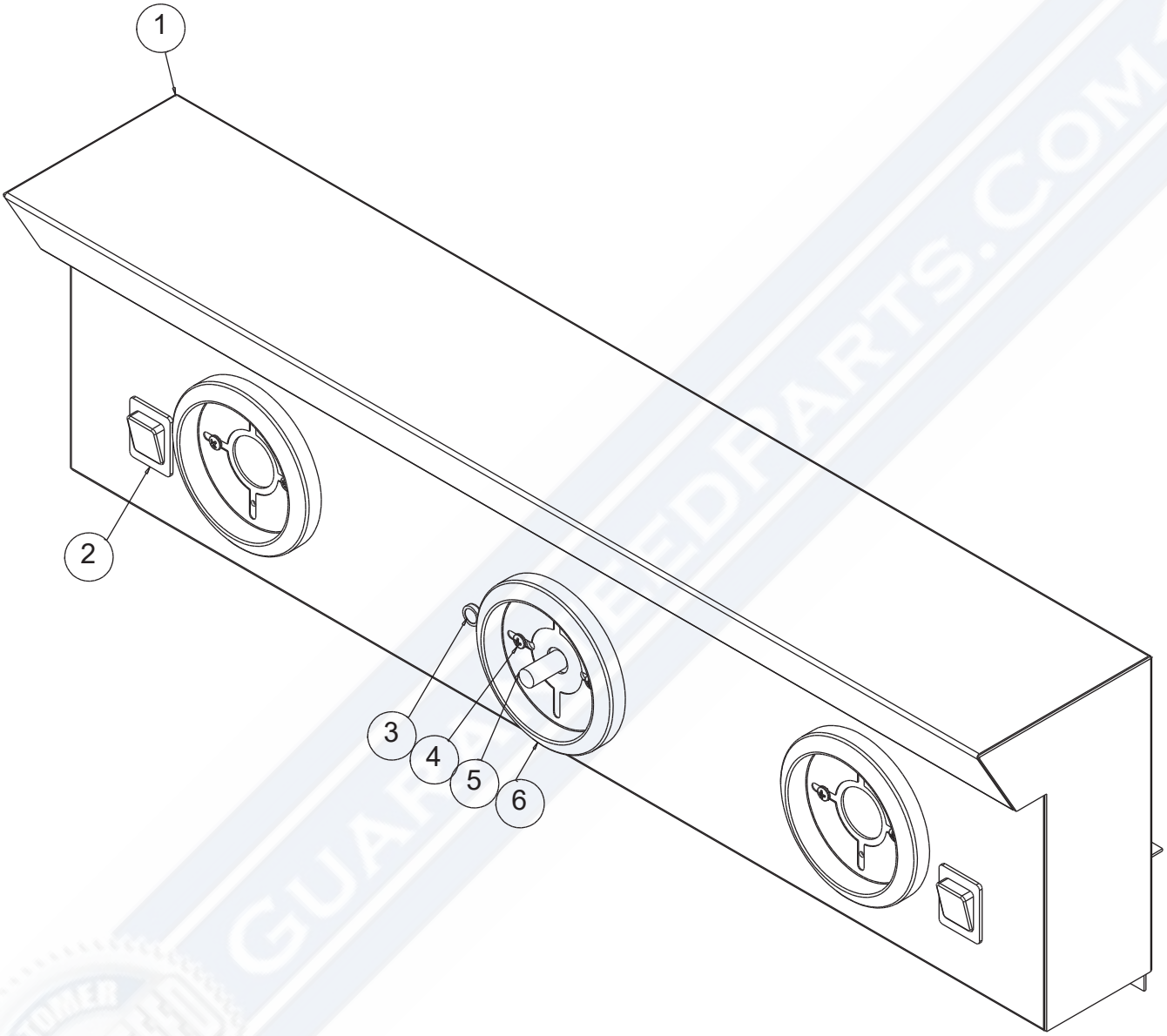

GUARANTEEDPARTS.COM
CUSTOMER SATISFACTION GUARANTEED

RNB24CB Control Panel Assembly

Reference Number	Part Number	Part Name	Quantity
1	502211	WA CONTROL PANEL RNB24CBV2	1
2	735003	SWITCH - ROCKER	2
3	728102	INDICATOR LAMP - BLUE	1
4	305201	SCREW 6-32 x PAN HEAD	6
5	799487	THERMOSTAT	1
6	732101	LARGE BEZEL	3

GUARANTEEDPARTS.COM
CUSTOMER SATISFACTION GUARANTEED

Control Panel Assembly RNB24G

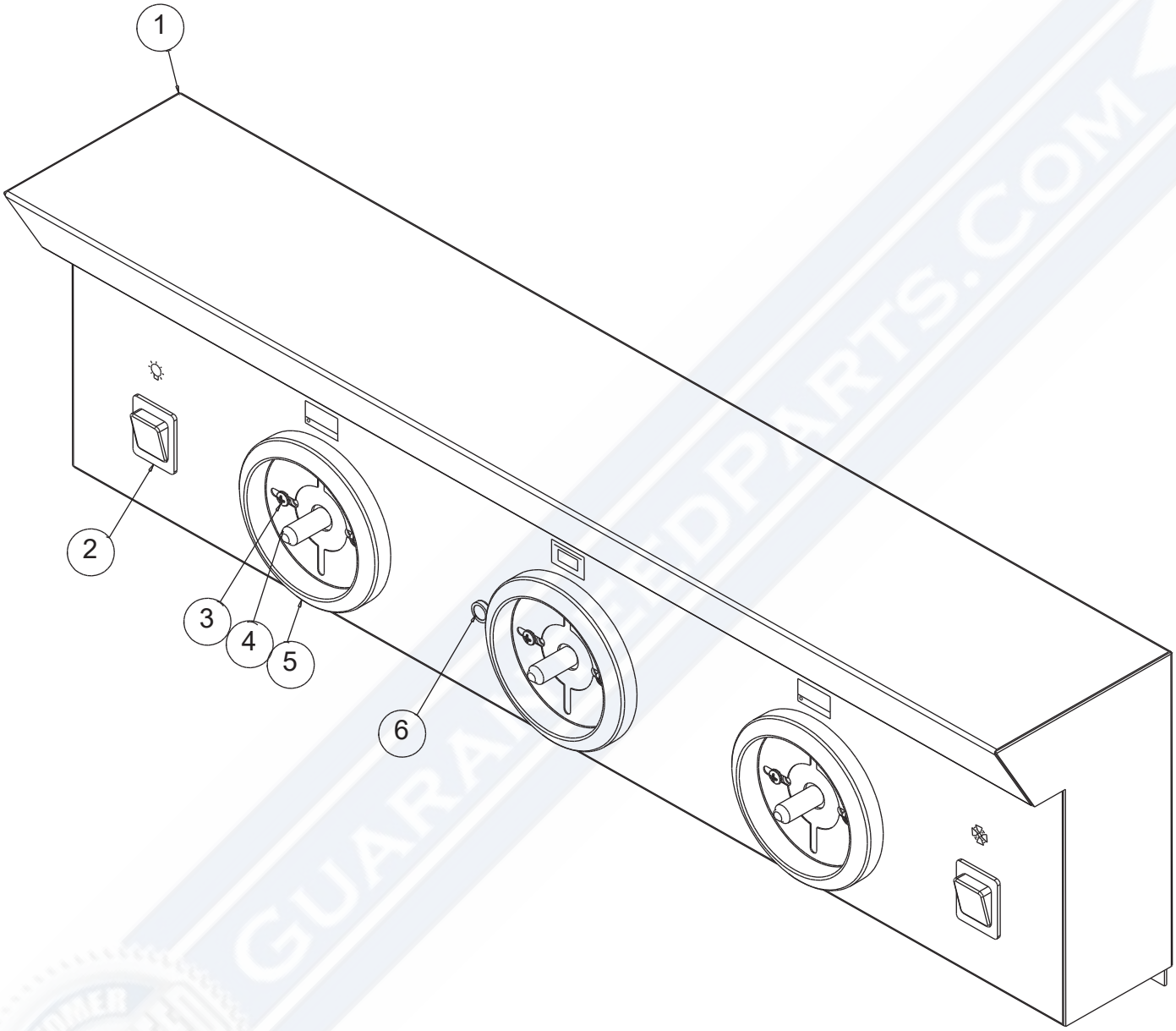

GUARANTEEDPARTS.COM
CUSTOMER SATISFACTION GUARANTEED

RNB24G Control Panel Assembly

Reference Number	Part Number	Part Name	Quantity
1	502210	WA CONTROL PANEL RNB24GV2	1
2	735003	SWITCH - ROCKER	2
3	305201	SCREW 6-32x3/16 PAN TAPTITE ZP	6
4	799487	OVEN THERMOSTAT	3
5	732101	LARGE BEZEL	3
6	728102	INDICATOR LAMP - BLUE	1

GUARANTEEDPARTS.COM
CUSTOMER SATISFACTION GUARANTEED

Control Panel Assembly RNB24FT

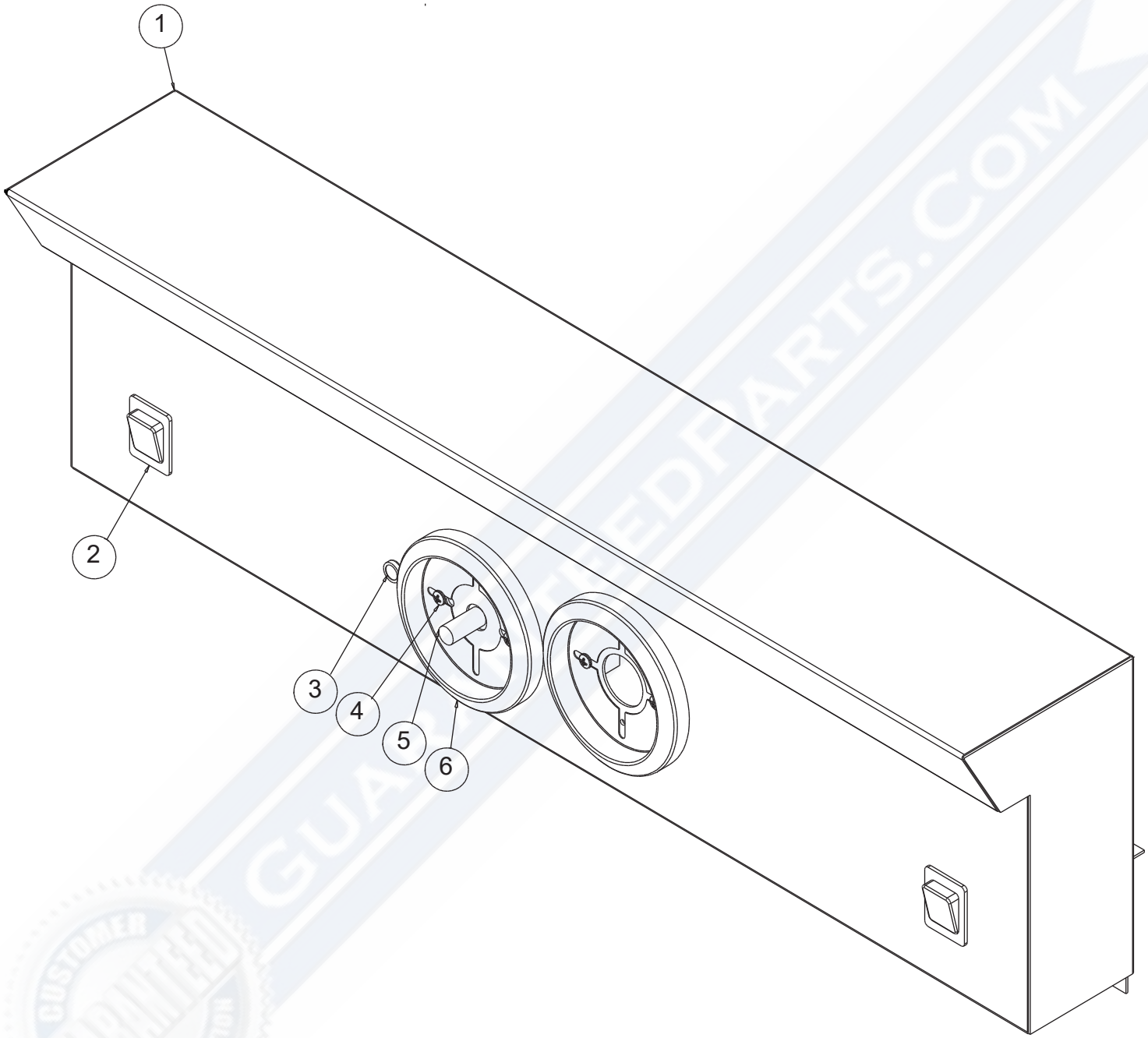

GUARANTEEDPARTS.COM
CUSTOMER GUARANTEED SATISFACTION

RNB364FT Control Panel Assembly

Reference Number	Part Number	Part Name	Quantity
1	502778	WA CTRL PNL RNB24FTV2	1
2	735003	SWITCH - ROCKER	2
3	728102	INDICATOR LAMP - BLUE	1
4	305201	SCREW 6-32 x PAN HEAD	4
5	799487	OVEN THERMOSTAT	1
6	732101	LARGE BEZEL	2

GUARANTEEDPARTS.COM
CUSTOMER SATISFACTION GUARANTEED

Grease Pan Assembly RNB24

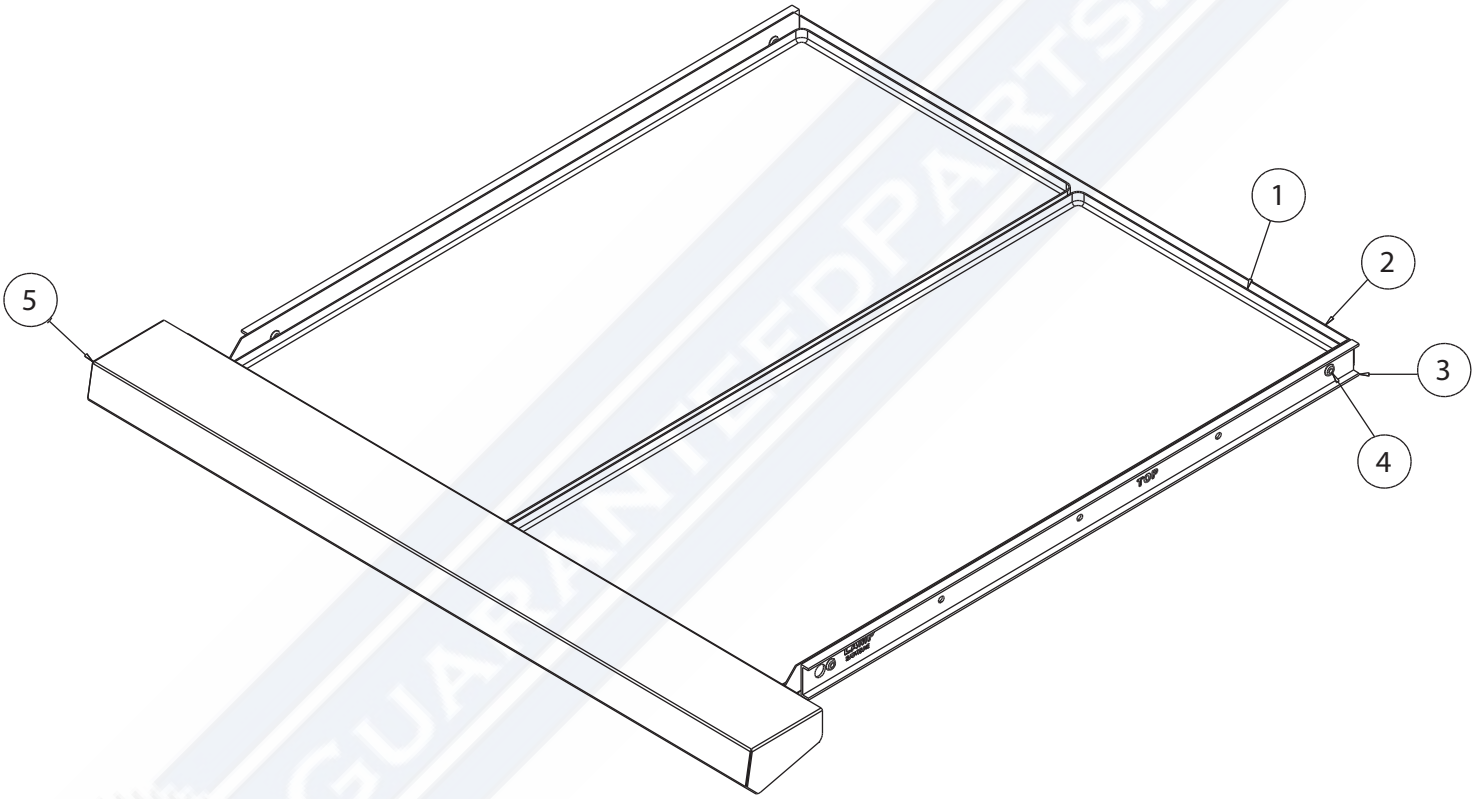

GUARANTEEDPARTS.COM
CUSTOMER SATISFACTION GUARANTEED

RNB24 Grease Pan Assembly

Reference Number	Part Number	Part Name	Quantity
1	704505	Grease Pan Insert	2
2	101682	GREASE PAN 24"	1
3	747803	Slide, Top Section	2
4	306301	RIVET, 3/16" COUNTERSINK BLIND	4
5	110836	GREASE PAN HANDLE 24	1

GUARANTEEDPARTS.COM
CUSTOMER SATISFACTION GUARANTEED

Grease Pan Assembly RNB30

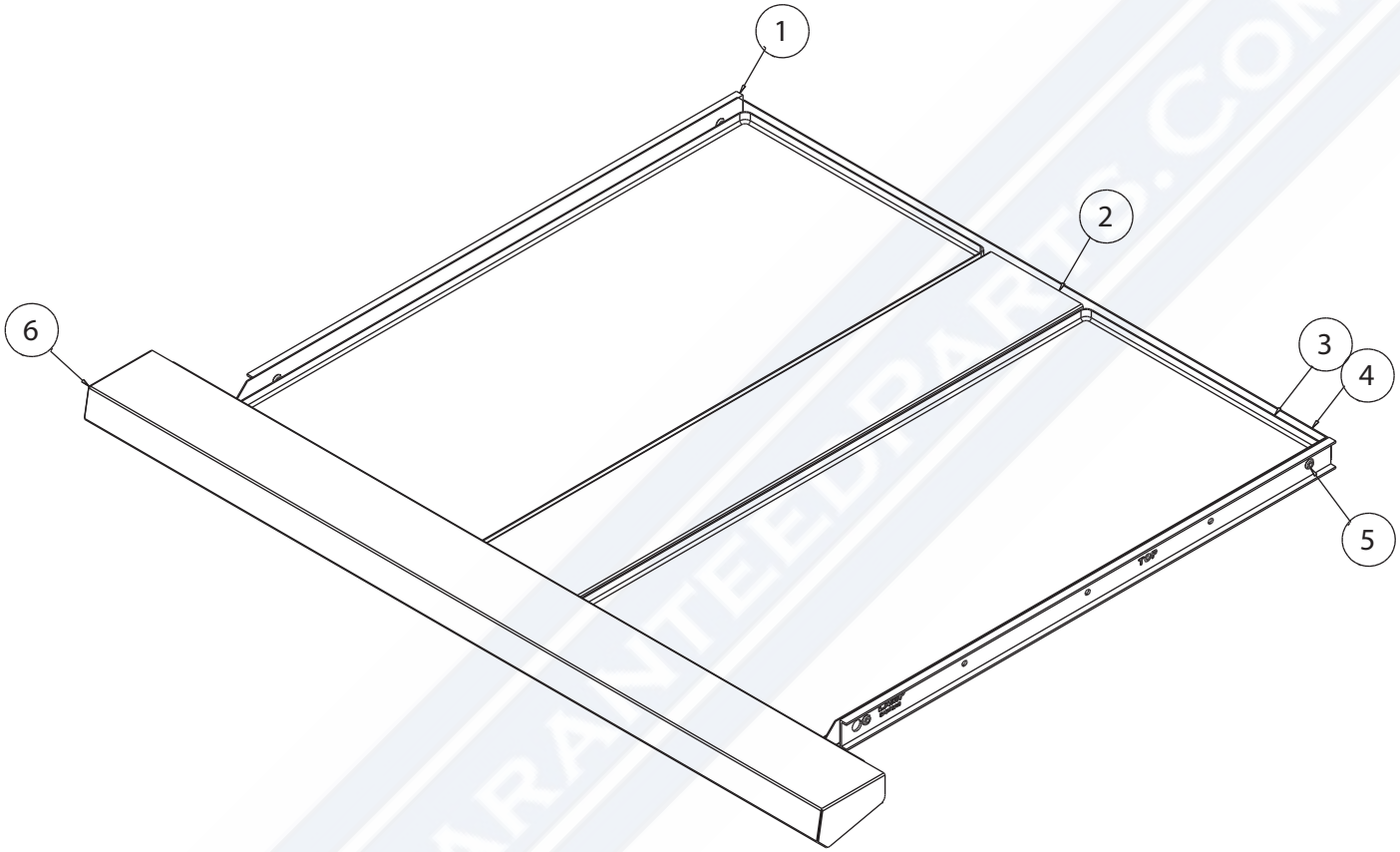

GUARANTEEDPARTS.COM
CUSTOMER SATISFACTION GUARANTEED

RNB30 Grease Pan Assembly

Reference Number	Part Number	Part Name	Quantity
1	747803	Slide, Top Section	2
2	101649	GREASE PAN FILLER V2 30	1
3	704505	Grease Pan Insert	2
4	101683	GREASE PAN 30"	1
5	306301	RIVET, 3/16" COUNTERSINK BLIND	4
6	110837	GREASE PAN HANDLE 30	1

GUARANTEEDPARTS.COM
CUSTOMER SATISFACTION GUARANTEED

Oven Bottom Assembly RNB24

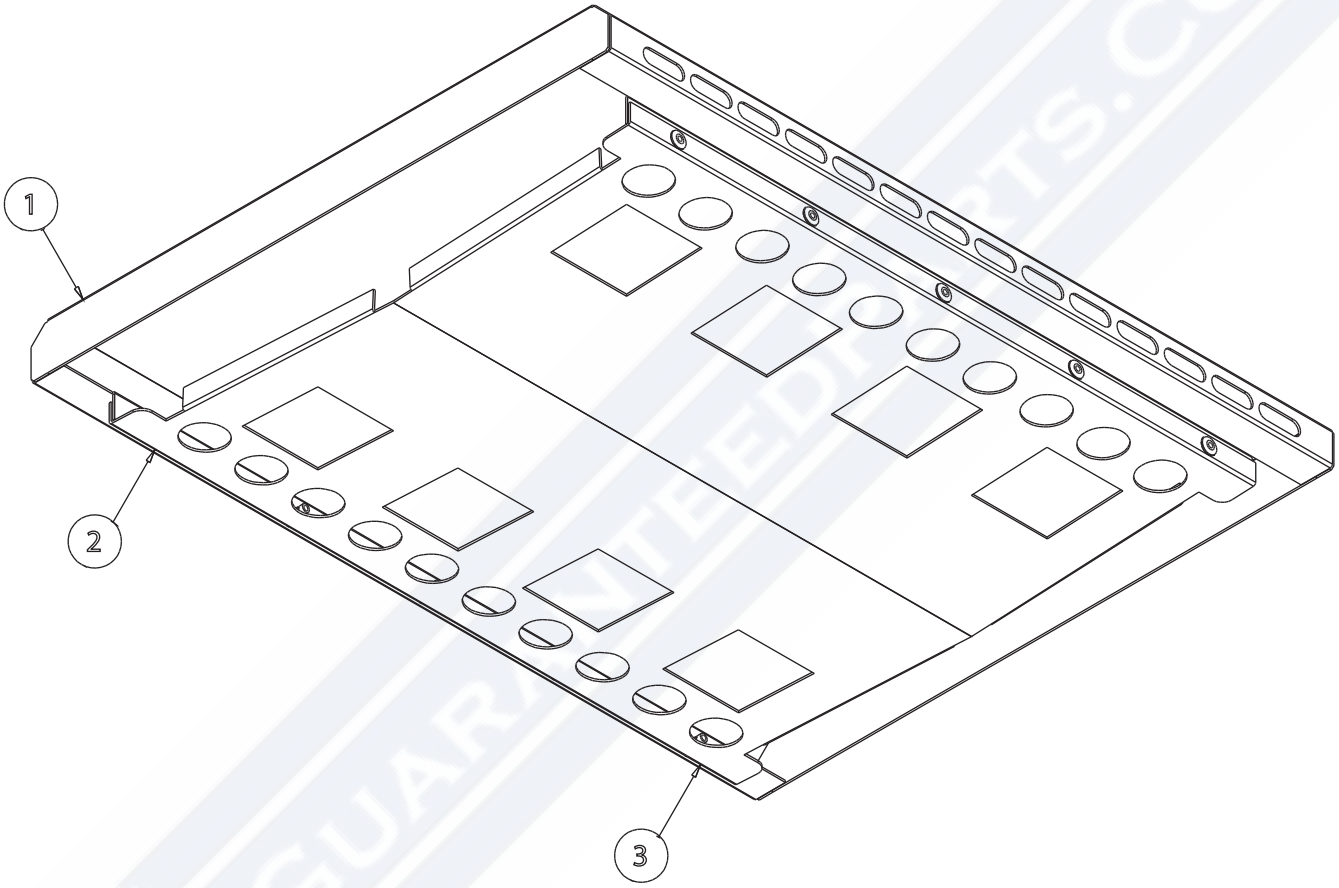

GUARANTEEDPARTS.COM
CUSTOMER SATISFACTION GUARANTEED

RNB24 Oven Bottom Assembly

Reference Number	Part Number	Part Name	Quantity
1	188802	OVEN BOTTOM V2 24	1
2	303901	Rivet 3-16 x 9-16 Lo-Profile	10
3	188902	FLAME DIVERTER V2 24	1

GUARANTEEDPARTS.COM
CUSTOMER SATISFACTION GUARANTEED

Oven Bottom Assembly RNB30

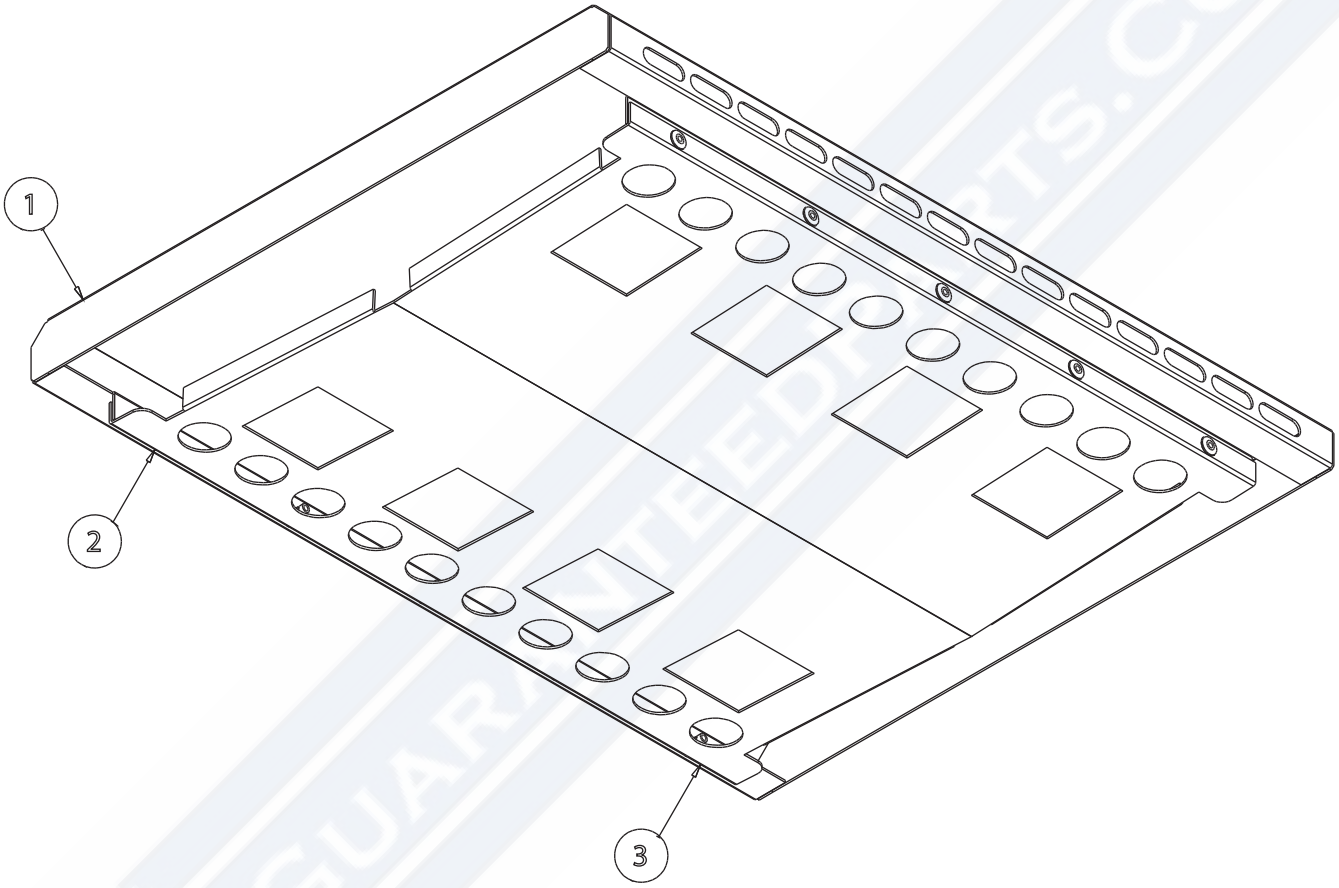

RNB30 Oven Bottom Assembly

Reference Number	Part Number	Part Name	Quantity
1	188803	OVEN BOTTOM V2 30	1
2	303901	Rivet 3-16 x 9-16 Lo-Profile	10
3	188903	FLAME DIVERTER V2 30	1

GUARANTEEDPARTS.COM
CUSTOMER SATISFACTION GUARANTEED

Oven Door Assembly RNB24

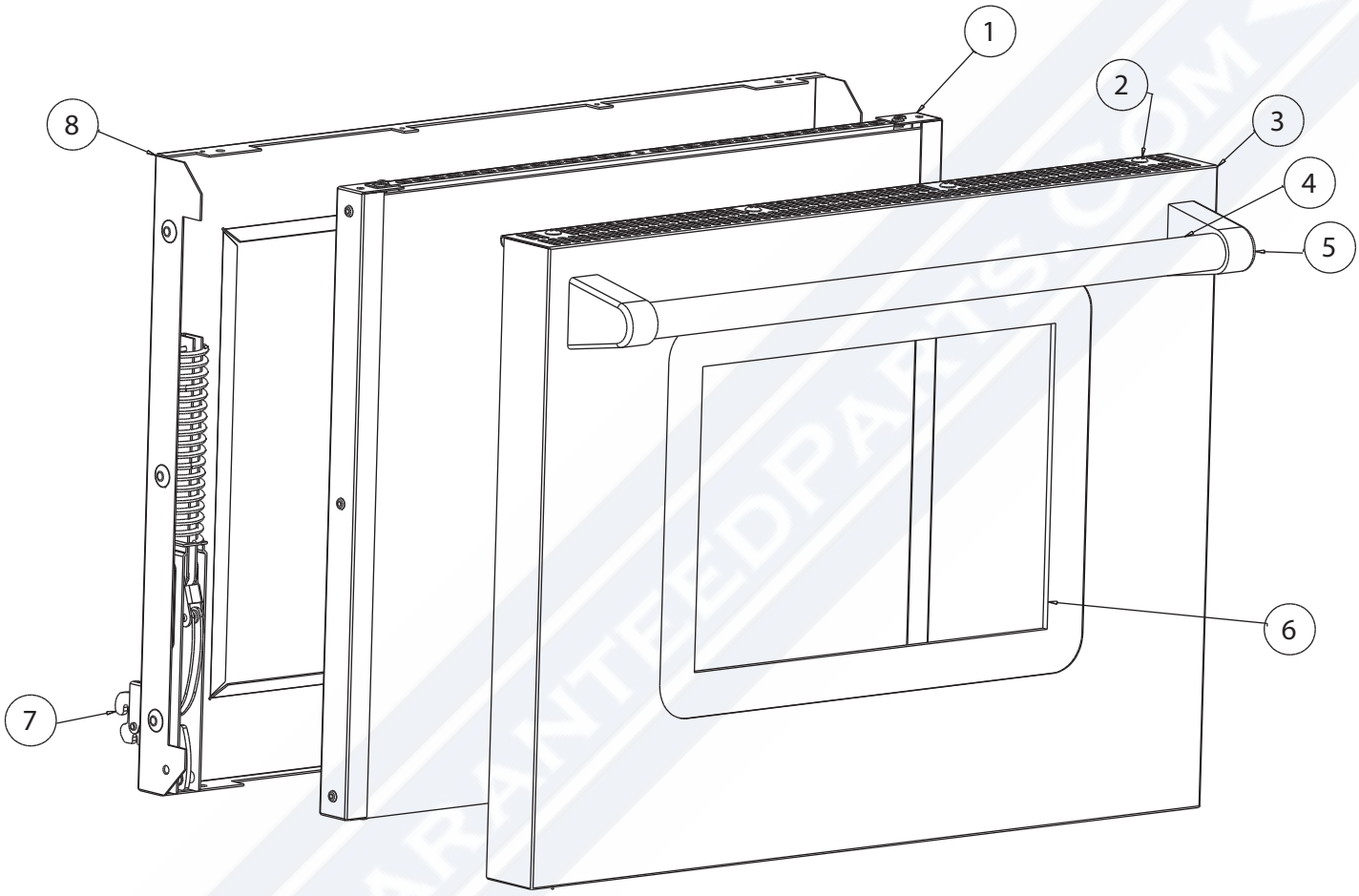

RNB24 Oven Door Assembly

Reference Number	Part Number	Part Name	Quantity
1	703519	GLASS PACK 24	1
2	303201	10 x 1-2 Phillips Truss Head	12
3	174850	DOOR PANEL BLUESTAR V2 24	1
4	703111	TUBE DOOR HANDLE 24	1
5	703001	Handle End	2
6	703525	STENCILED SHORT DOOR GLASS 24	1
7	742706	HINGE KEYSTONE BLUE	1
8	174945	DOOR LINER V2 24	1

GUARANTEEDPARTS.COM
CUSTOMER SATISFACTION GUARANTEED

Oven Door Assembly RNB30

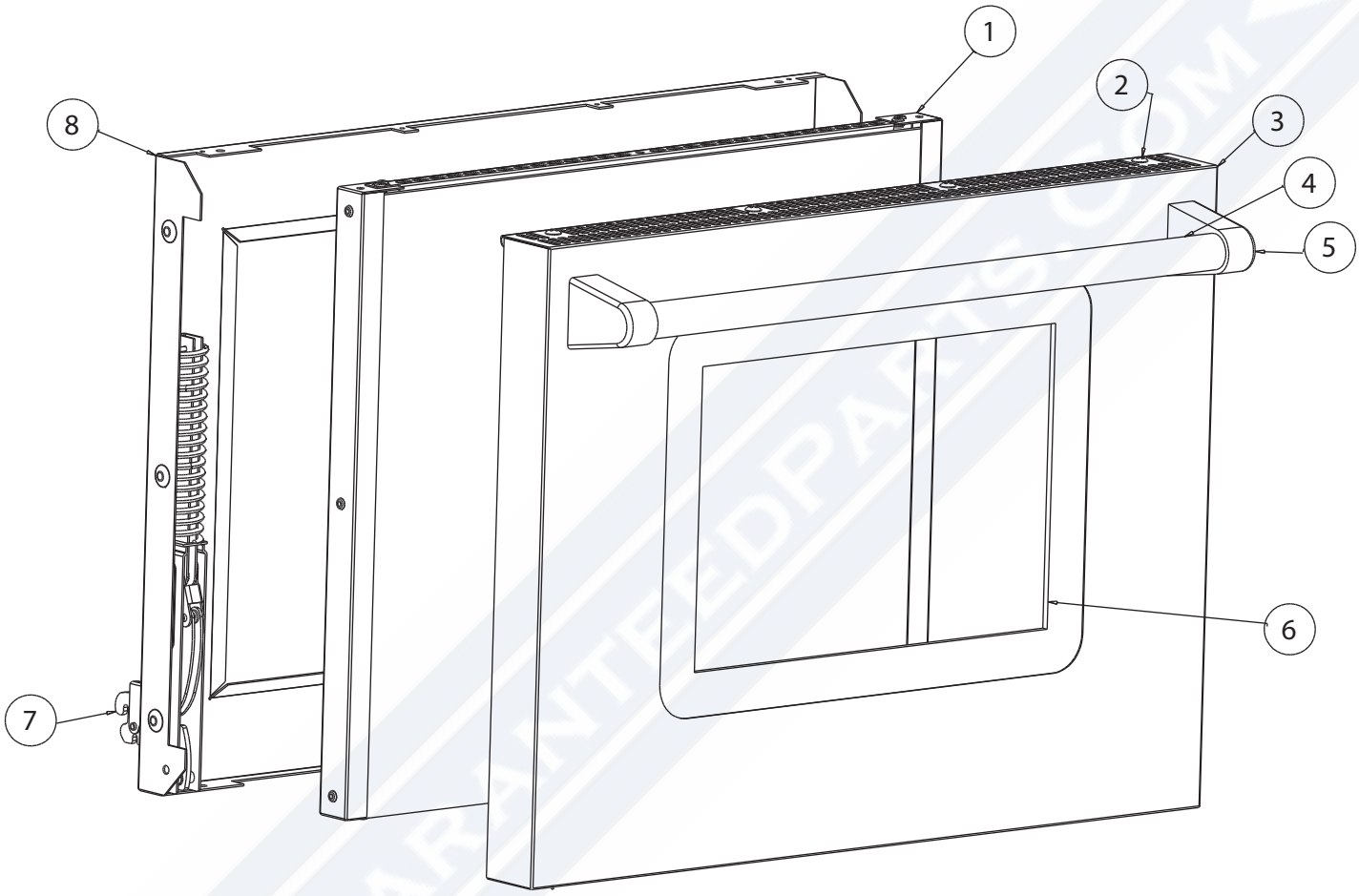

RNB30 Oven Door Assembly

Reference Number	Part Number	Part Name	Quantity
1	610035	GLASS PACK 30	1
2	303201	10 x 1-2 Phillips Truss Head	14
3	174851	DOOR PANEL BLUESTAR V2 30	1
4	703118	TUBE DOOR HANDLE 30	1
5	703001	Handle End	2
6	703523	STENCILED SHORT DOOR GLASS 30	1
7	742705	HINGE KEYSTONE RED	1
8	174946	DOOR LINER V2 30	1

GUARANTEEDPARTS.COM
CUSTOMER SATISFACTION GUARANTEED

Oven Flue

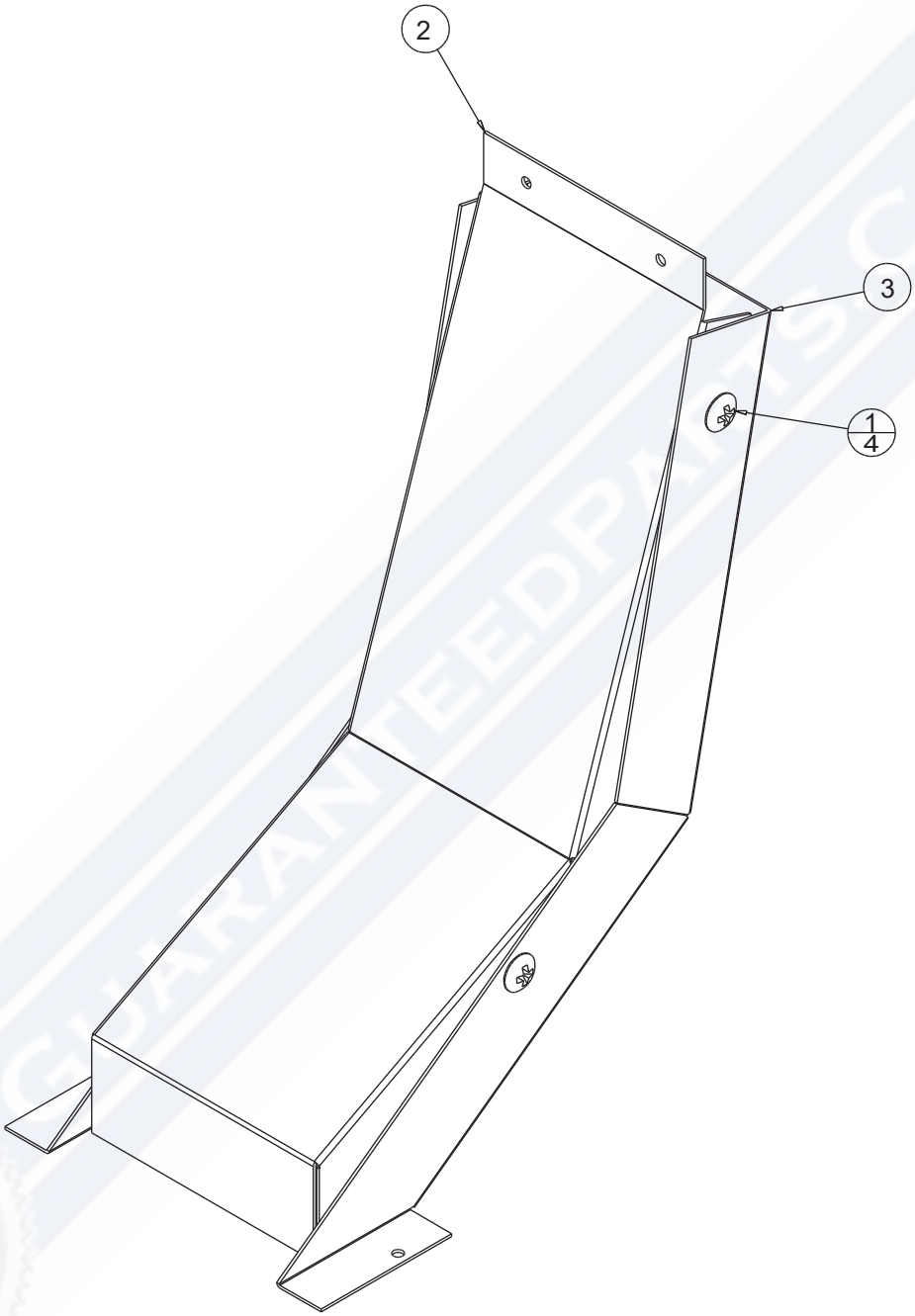

Oven Flue

Reference Number	Part Number	Part Name	Quantity
1	303201	Screw #10x1/2 PH Truss ZP	4
2	116814	ANGLED 2 SLOPE FLUE TOP	1
3	116815	ANGLED 2 SLOPE FLUE BOTTOM	1

GUARANTEEDPARTS.COM
CUSTOMER SATISFACTION GUARANTEED

Front 18K 22K Burner Assembly

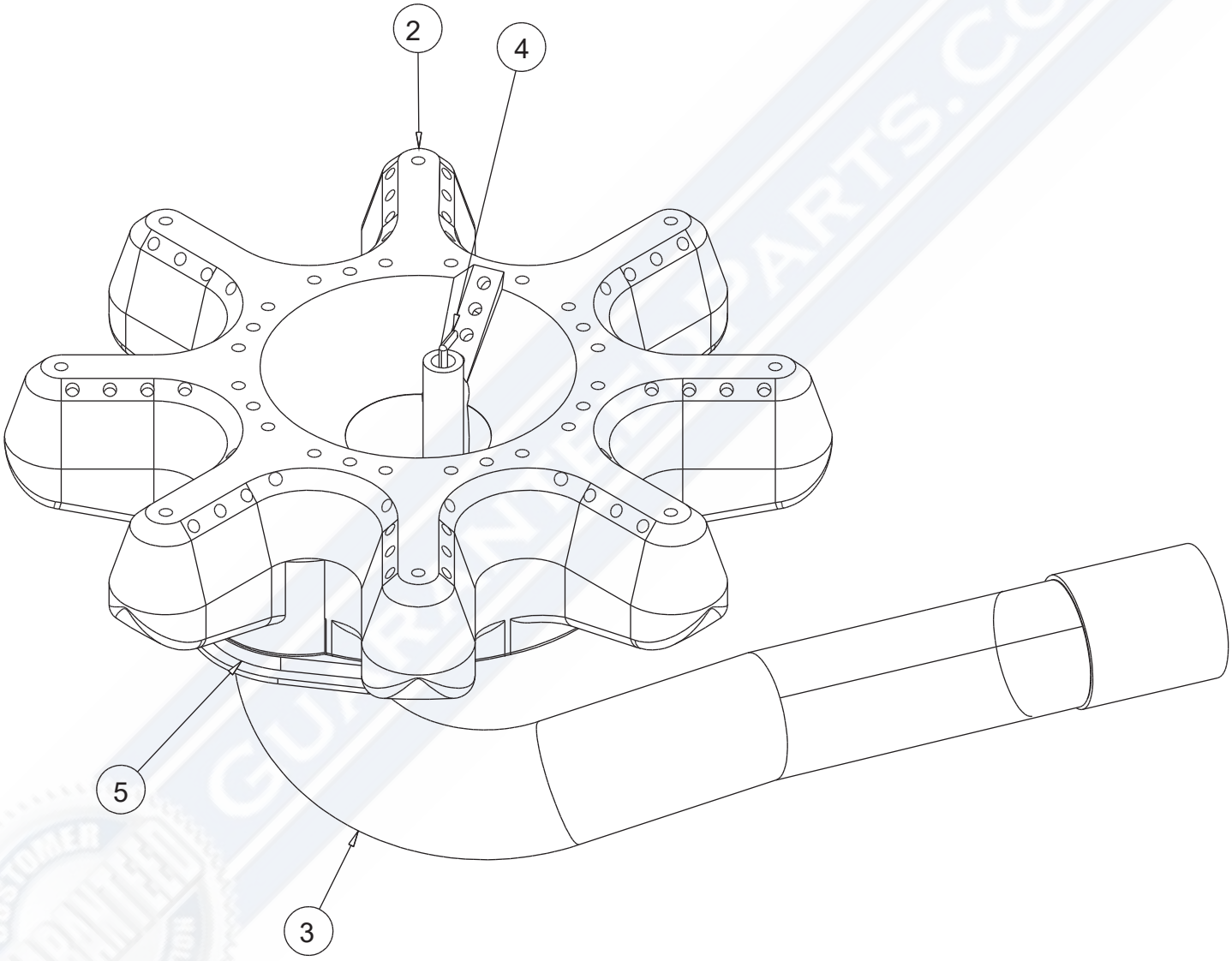

Front 18K 22K Burner Assembly

Reference Number	Part Number	Part Name	Quantity
1	304202	SCREW 10-24 x 3/8 PH TRUSS SS	2
2	729801	18K/22K 8 FINGER STAR BURNER	1
3	733801	0029006B01 1" OD FRONT MIXER T	1
4	741801	ELECTRODE SIM/15K/18K/22K	1
5	734301	GASKET FOR VENTURI	1

GUARANTEEDPARTS.COM
GUARANTEED CUSTOMER SATISFACTION

Front 15K Burner Assembly

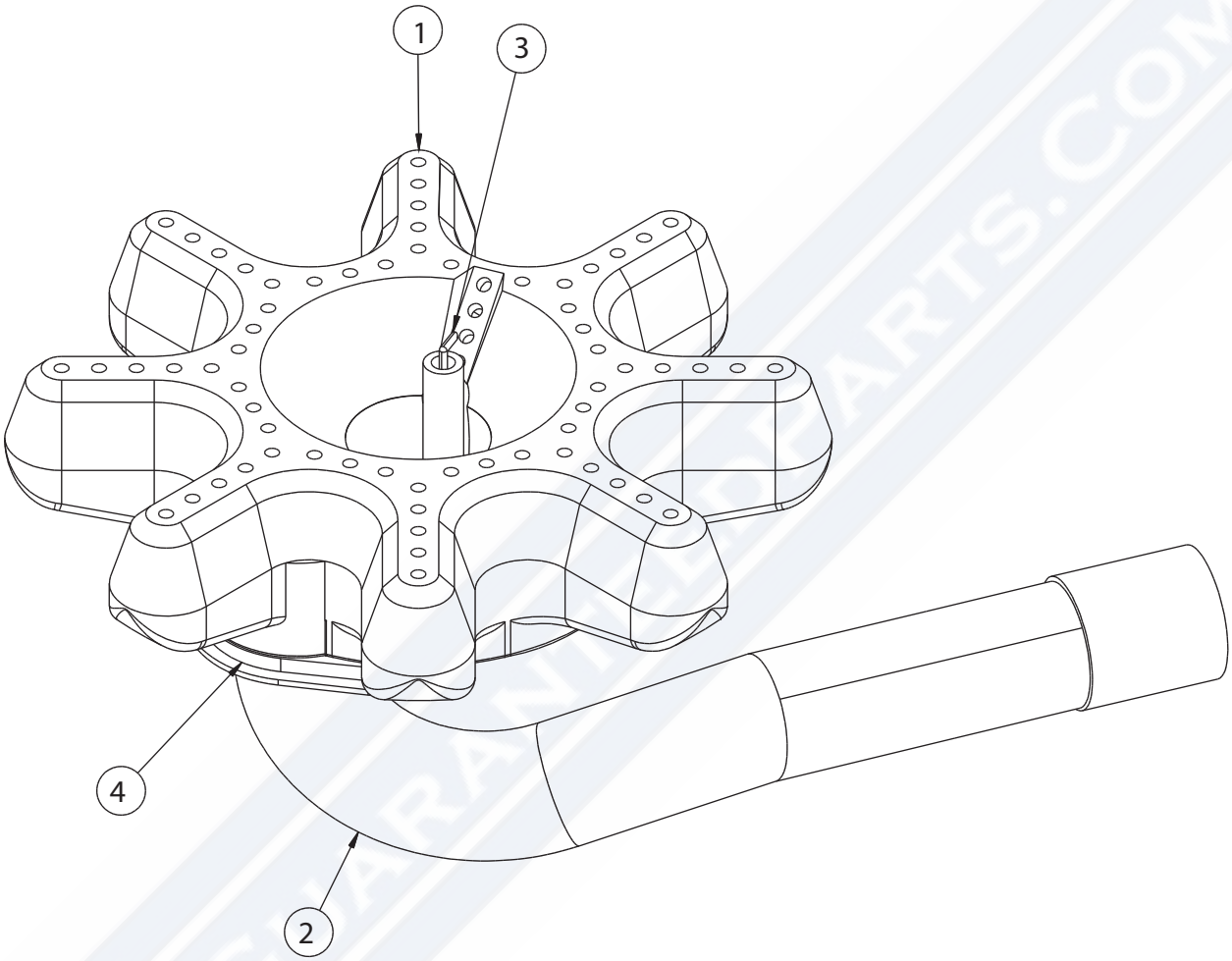

GUARANTEEDPARTS.COM
CUSTOMER SATISFACTION GUARANTEED

Front 15K Burner Assembly

Reference Number	Part Number	Part Name	Quantity
1	729802	15K 8 FINGER STAR BURNER	1
2	733801	0029006B01 1" OD FRONT MIXER T	1
3	741801	ELECTRODE SIM/15K/18K/22K	1
4	734301	GASKET FOR VENTURI	1
N/S	304202	SCREW 10-24 x 3/8 PH TRUSS SS	2

GUARANTEEDPARTS.COM
GUARANTEED CUSTOMER SATISFACTION

Rear 15K Burner Assembly

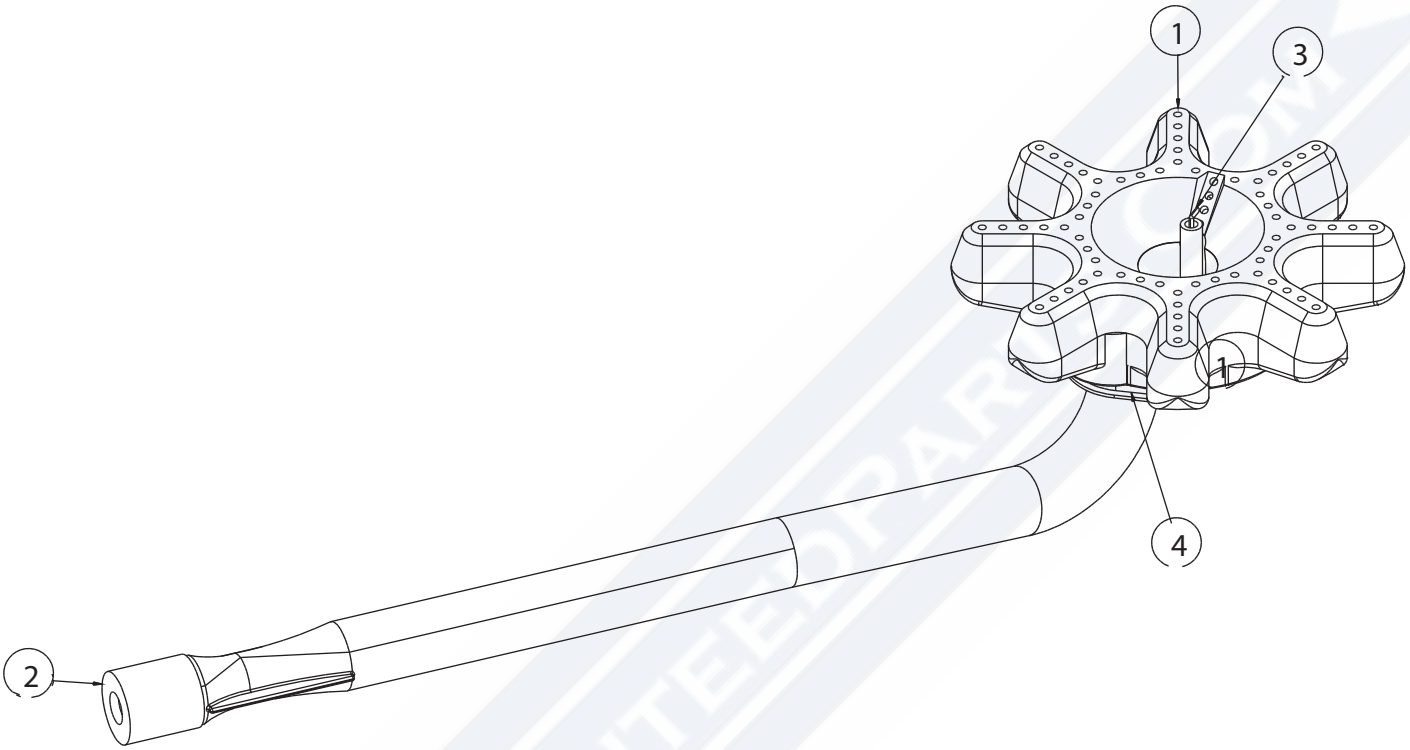

Rear 15K Burner Assembly

Reference Number	Part Number	Part Name	Quantity
1	729802	18K/22K 8 FINGER STAR BURNER	1
2	733802	0029007B01, 1" OD REAR MIXER	1
3	741801	ELECTRODE SIM/15K/18K/22K	1
4	734301	GASKET FOR VENTURI	1
N/S	304202	SCREW 10-24 x 3/8 PH TRUSS SS	2

GUARANTEEDPARTS.COM
CUSTOMER SATISFACTION GUARANTEED

Rear Simmer Burner Assembly

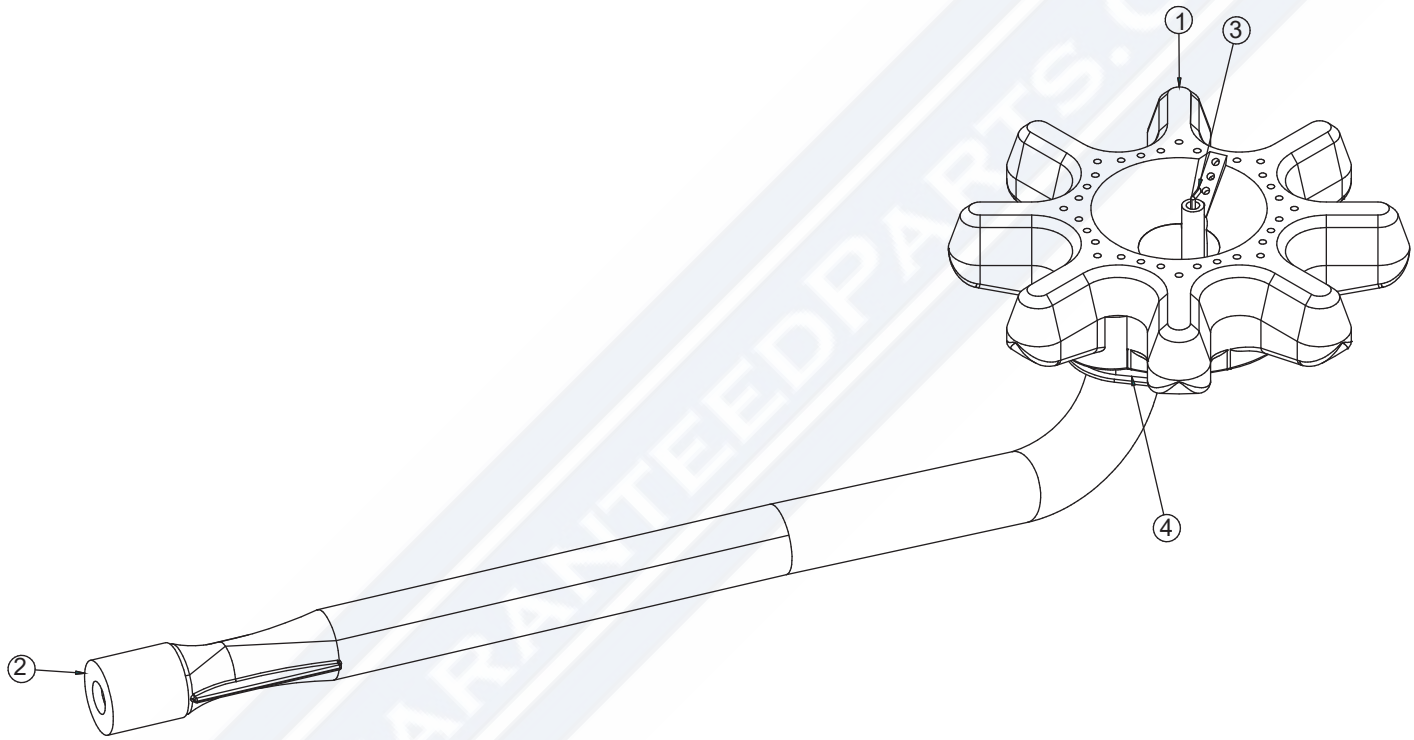

GUARANTEEDPARTS.COM

Rear Simmer Burner Assembly

Reference Number	Part Number	Part Name	Quantity
1	729803	9.5 K STAR BURNER / SIMMER	1
2	733802	0029007B01, 1" OD REAR MIXER	1
3	741801	ELECTRODE SIM/15K/18K/22K	1
4	734301	GASKET FOR VENTURI	1
N/S	304202	SCREW 10-24 x 3/8 PH TRUSS SS	2

GUARANTEEDPARTS.COM
CUSTOMER SATISFACTION GUARANTEED

Orifice Chart

Part Number	Descrpition	Fuel Type	Burner Type	Sea Level	2000 ^	3000^	4000^	5000^	6000^	7000^	8000^	9000^	10000^
709512	Orifice Hood 1.25mm	Nat	Surface Simmer	1.25									
709570	Orifice Hood #70	LP	Surface Simmer	70	70	71	71	71	71	72	72	72	72
709547	Orifice Hood #47	Nat	Surface 22k BTU	47	48	48	49	49	49	50	50	51	51
709555	Orifice Hood #55	LP	Surface 22k BTU	55	55	55	55	56	56	56	56	56	57
709551	Orifice Hood #51	Nat	Surface 15k BTU	51	51	52	52	52	52	53	53	53	54
709559	Orifice Hood #59	LP	Surface 15k BTU	59	60	61	61	62	62	63	64	64	65
709548	Orifice Hood #48	Nat	Surface 18k BTU	48	49	49	49	50	50	50	51	51	52
709512	Orifice Hood 1.25mm	LP	Surface 18k BTU	1.25									
709543	Orifice Hood #43	Nat	Surface Platinum 25k BTU	43	44	44	44	45	45	46	47	47	48
709555	Orifice Hood #55	LP	Surface Platinum 25k BTU	55	55	55	55	56	56	56	56	56	57
735550	IR burner elbow & orifice #50	Nat	IR Broiler	50	51	51	51	51	52	52	52	53	53
735556	IR burner elbow & orifice #56	LP	IR Broiler	56	56	56	57	57	57	58	59	59	60
718742	Oven burner orifice #42	Nat	Bake Burner	42	42	43	43	43	44	44	45	46	47
718752	Oven burner orifice #53	LP	Bake Burner	53	54	54	54	54	54	54	55	55	55
781010	Power Burner Orifice BLANK	S.O.	Power Burner Platinum - Order to gas size, Nat - .096 / LP - .056										
		Nat	Griddle										
		LP	Griddle										
		Nat	Char Grill										
		LP	Char Grill										
		Nat	French Top										
		LP	French Top										
		Nat	Salamander										
		LP	Salamander										